E-mu Systems, Inc.
applied magic for the arts

EMULATOR II

SCHEMATICS

© 1985 E-mu Systems Inc.
Enhanced by The Emulator Archive 2000
www.emulatorarchive.com

EMULATOR II SCHEMATICS

CPU BOARD

Scanner CPU	7 - 6
Main CPU	7 - 10
Disk Interface	7 - 15
Serial Interfaces	7 - 16
Microcontroller	7 - 17
RAM Timing	7 - 23
RAM Address Control	7 - 24
RAM Buffering	7 - 25
Dynamic RAM	7 - 26
Clocks and Reset	7 - 30
Power and Connectors	7 - 31
Piggyback Memory	7 - 32

OUTPUT BOARD

Sample/Hold	7 - 39
Timers	7 - 40
Filter Select	7 - 41
Input Analog	7 - 42
SAR	7 - 43
Channels 0 - 7	7 - 44
Mixer	7 - 52
Connectors and Power	7 - 53

Keyboard	7 - 54
Power Supply	

(C) 1985, E-mu Systems, Inc., Santa Cruz, Ca. All rights reserved.

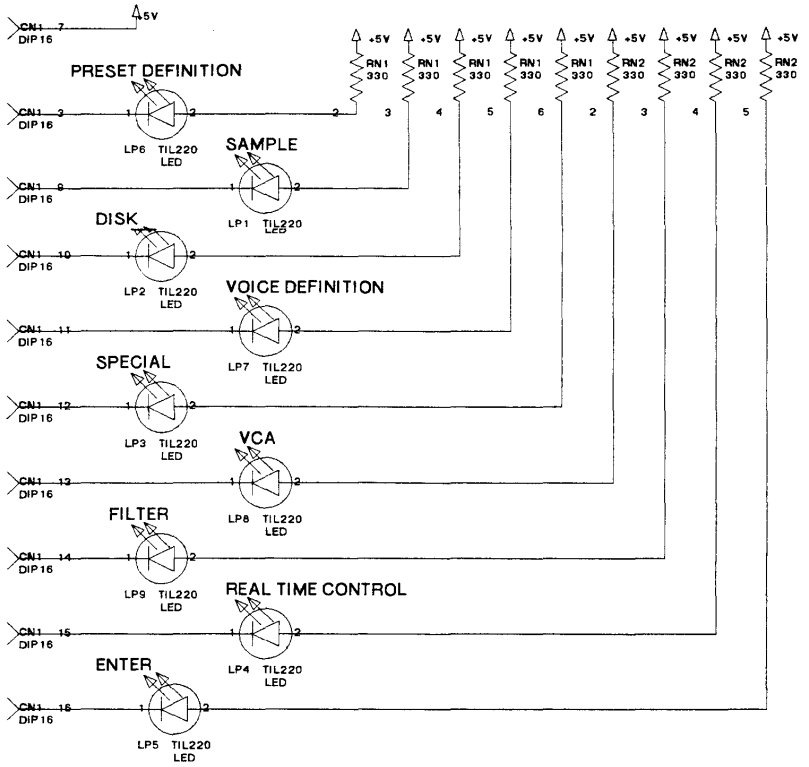

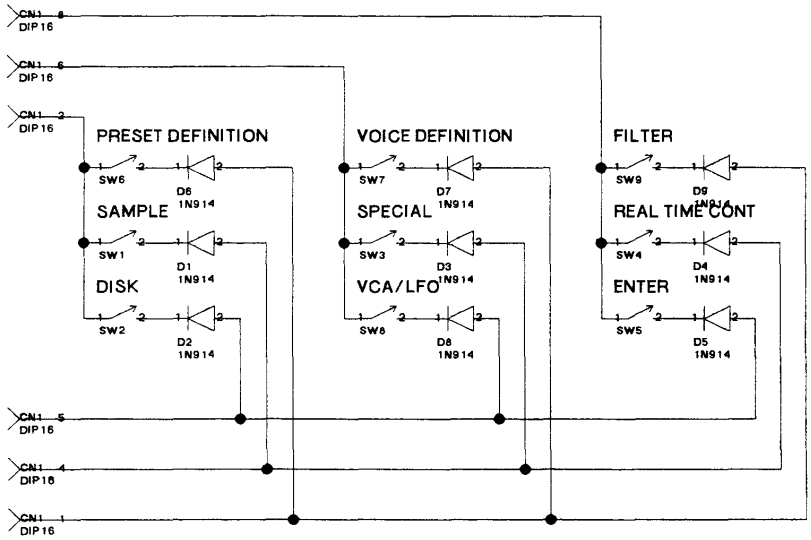

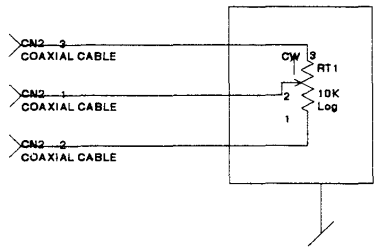

Note: LED's and Switches are located for convenience in layout only.

E-mu Systems, Inc. applied magic for the arts		
Emulator 2 Right Panel		
DRAWN BY DPR	DOC NO S-6155-001 PAGE 1 OF 1	
REV 1.A	DATE 850813	7 - 2

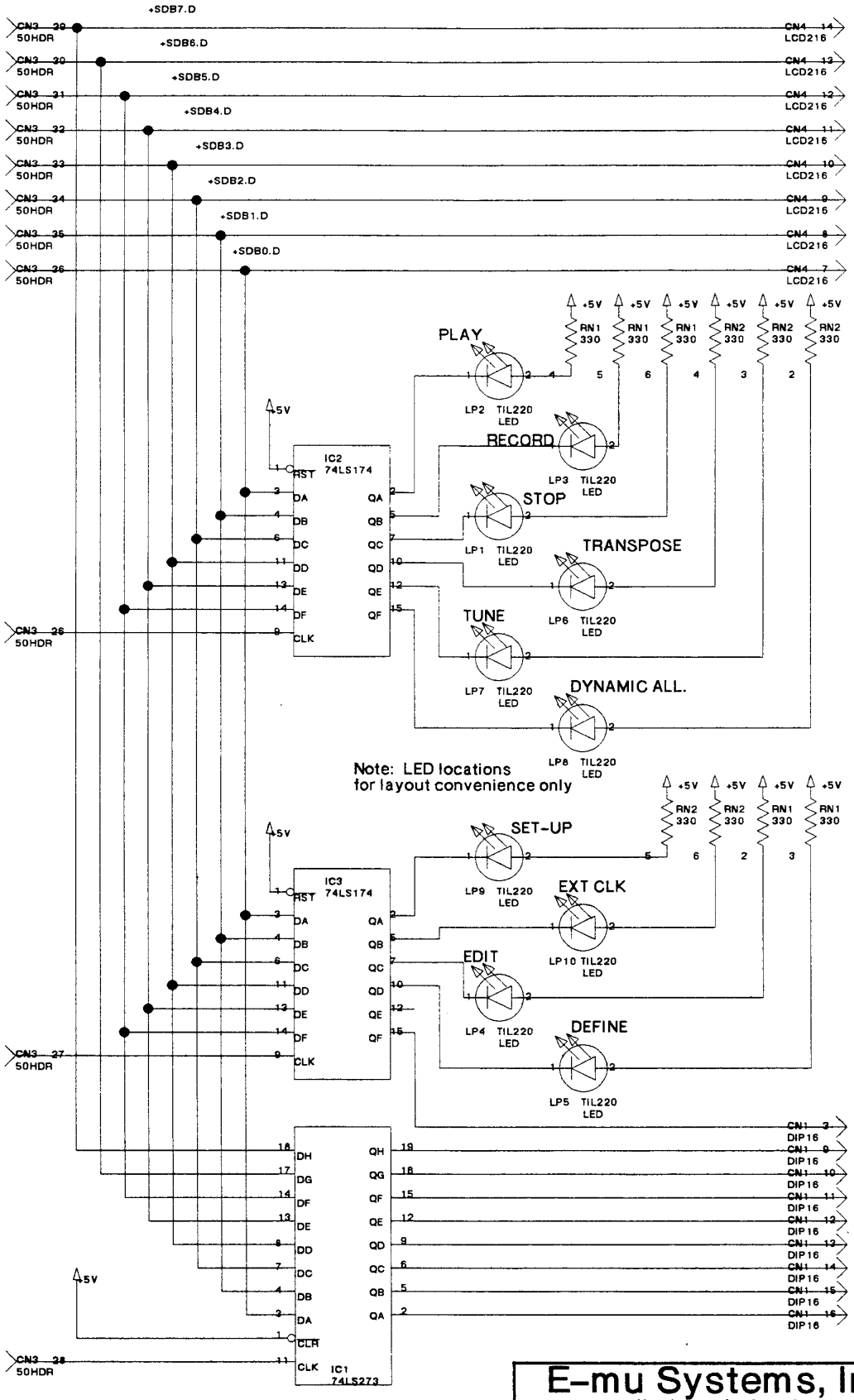

E-mu Systems, Inc.

applied magic for the arts

Emulator 2 Left Panel – LED drivers

DRAWN BY: DPR	DOC NO. S-8153-001 PAGE 1 OF 3	
REV. 1.A	DATE 850613	7 - 3

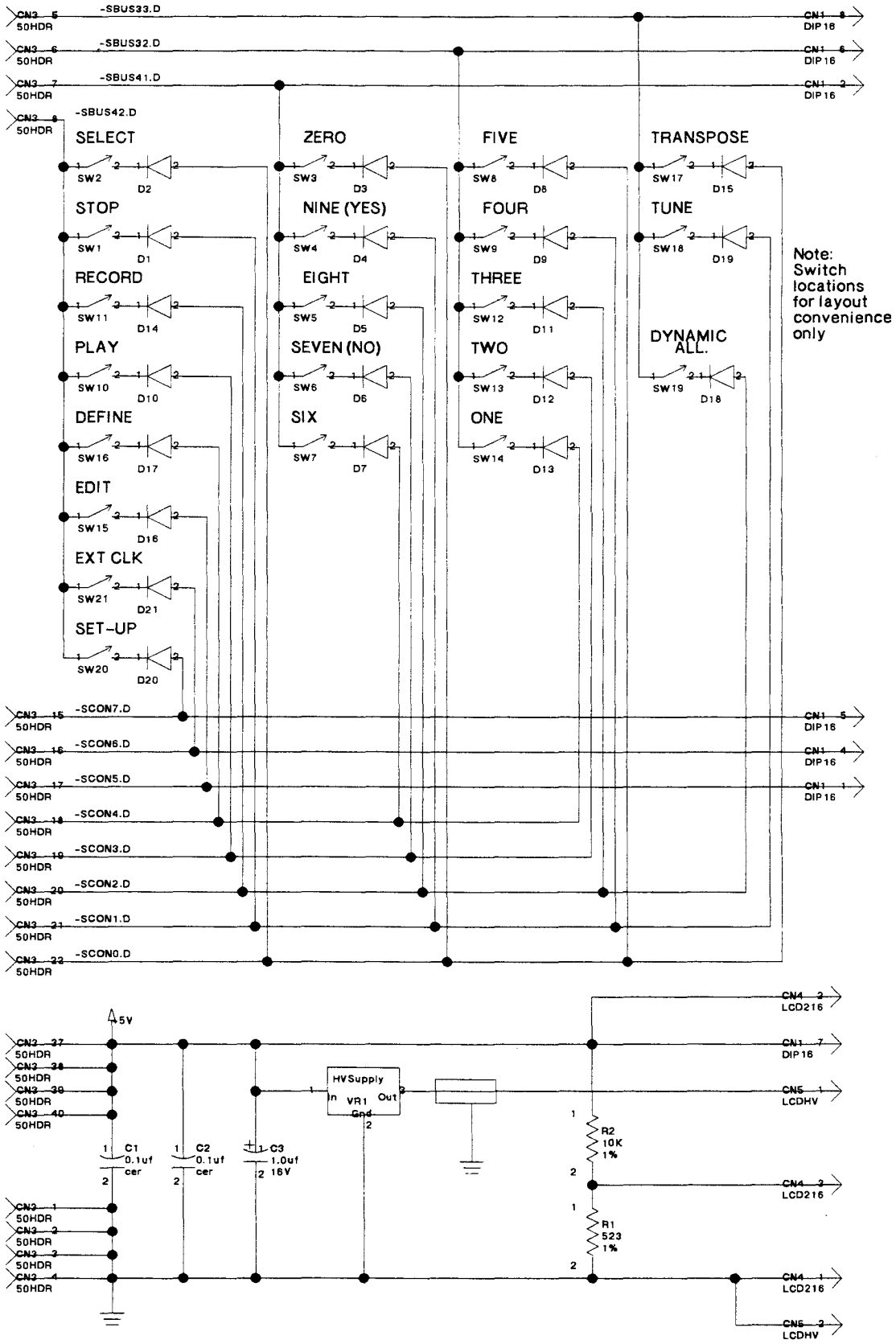

E-mu Systems, Inc.	
Emulator 2 Left Panel - PB's & supplies	
DOC NO. S-6153-001 PAGE 2 OF 3	7 - 4

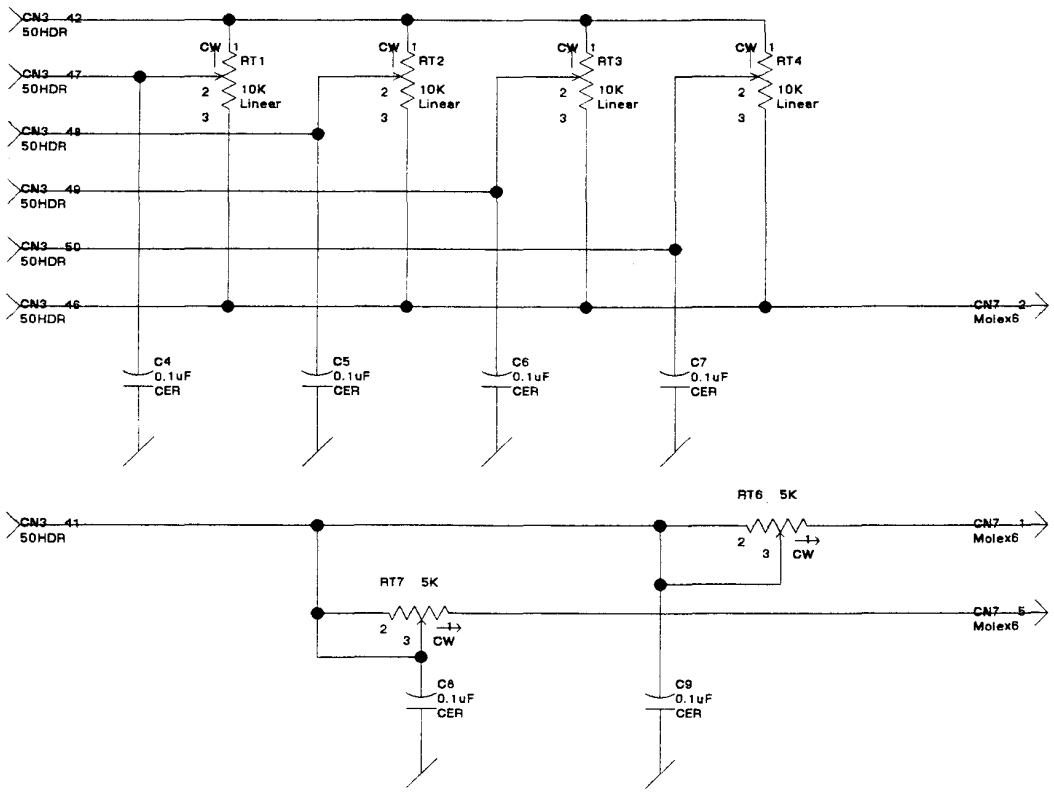

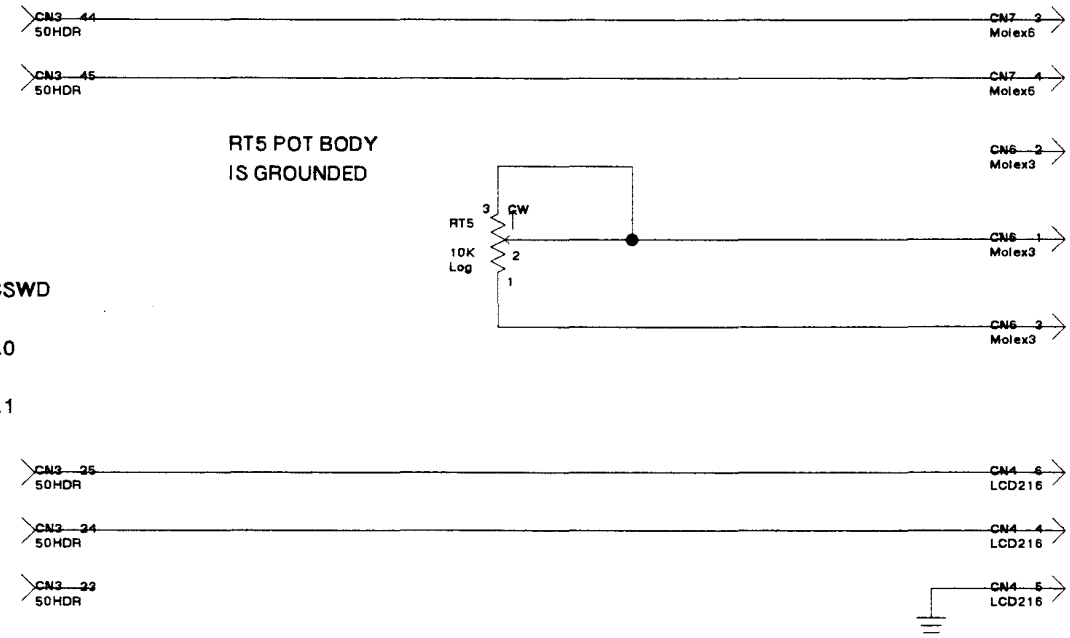

E-mu Systems, Inc.	
Emulator 2 Left Panel - Sliders & Wheels	
DOC NO. S-6153-001 PAGE 3 OF 3	7 - 5

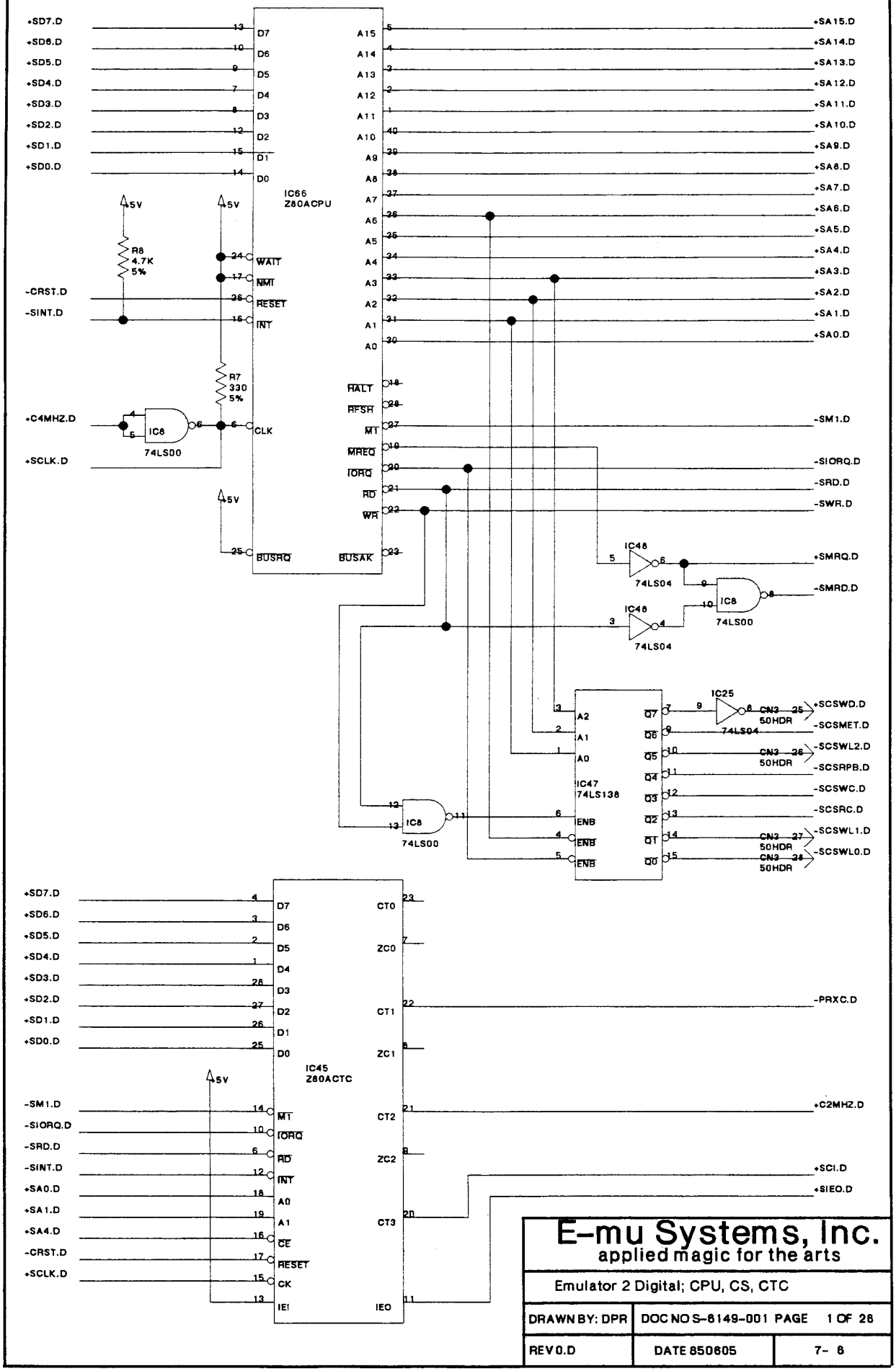

E-mu Systems, Inc.

applied magic for the arts

Emulator 2 Digital; CPU, CS, CTC

DRAWN BY: DPR	DOC NO S-6149-001 PAGE 1 OF 28	
REV 0.D	DATE 850605	7- 6

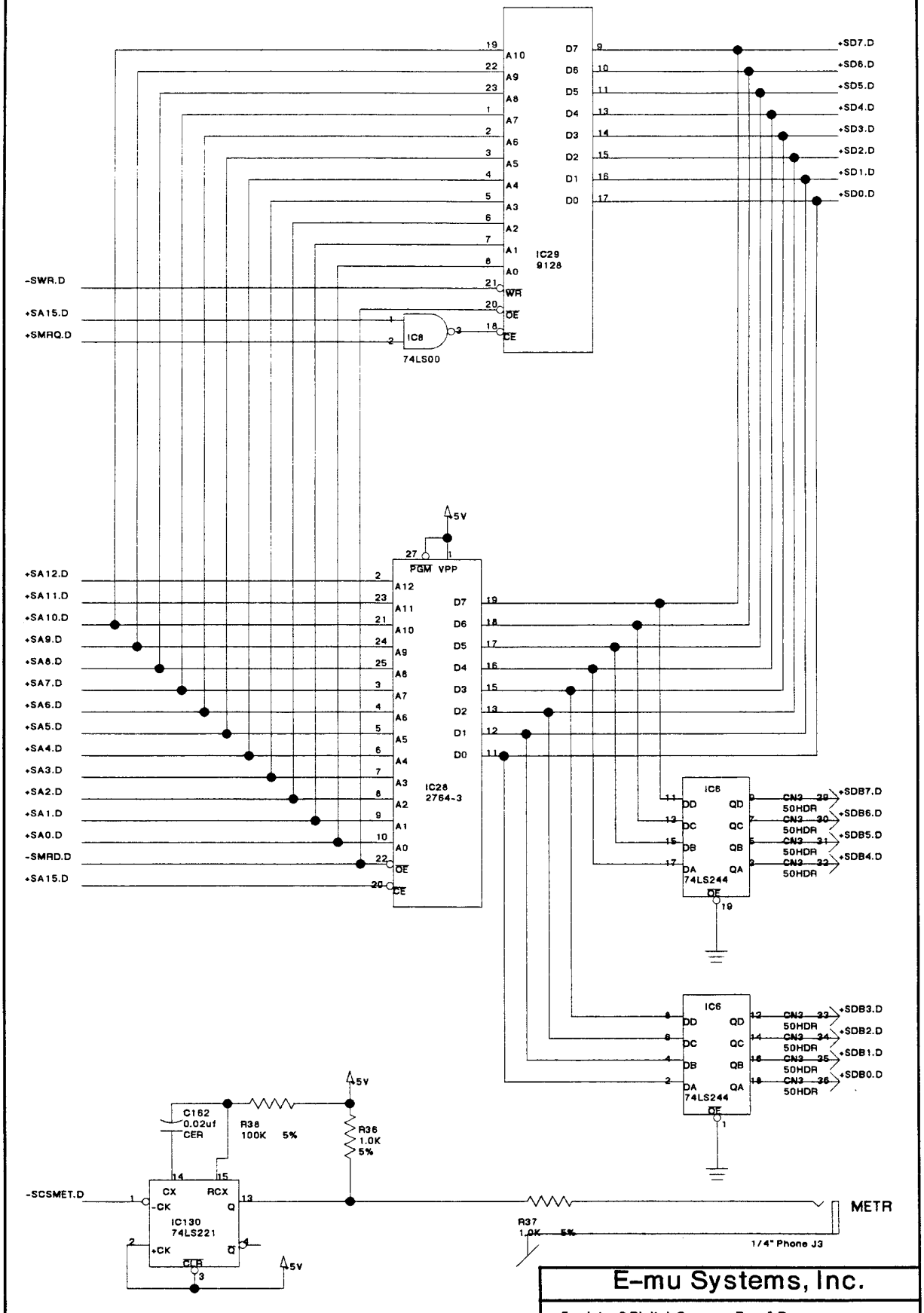

E-mu Systems, Inc.

Emulator 2 Digital; Scanner-Ram & Rom

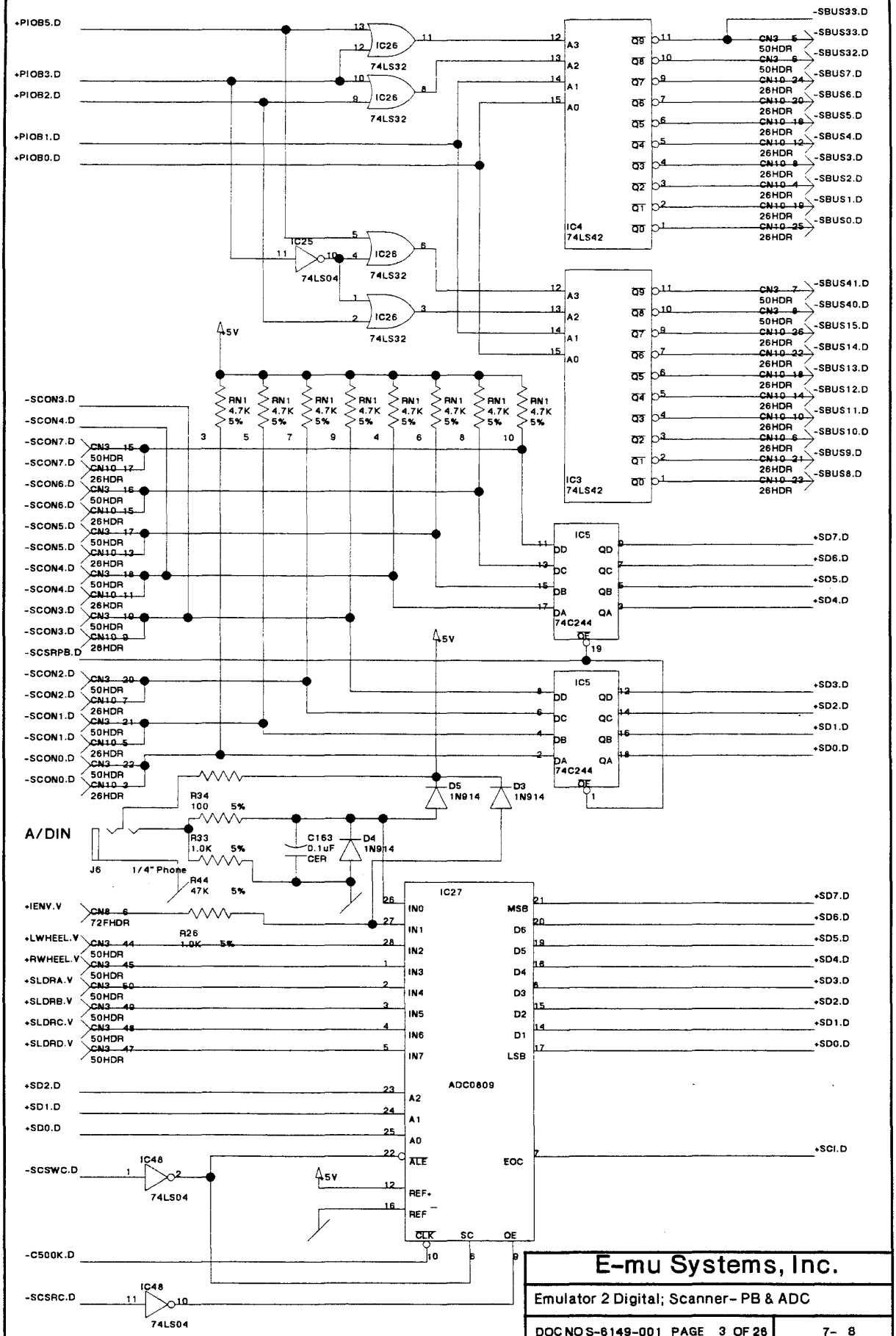

E-mu Systems, Inc.

Emulator 2 Digital; Scanner- PB & ADC

DOC NO S-6149-001 PAGE 3 OF 28

7- 8

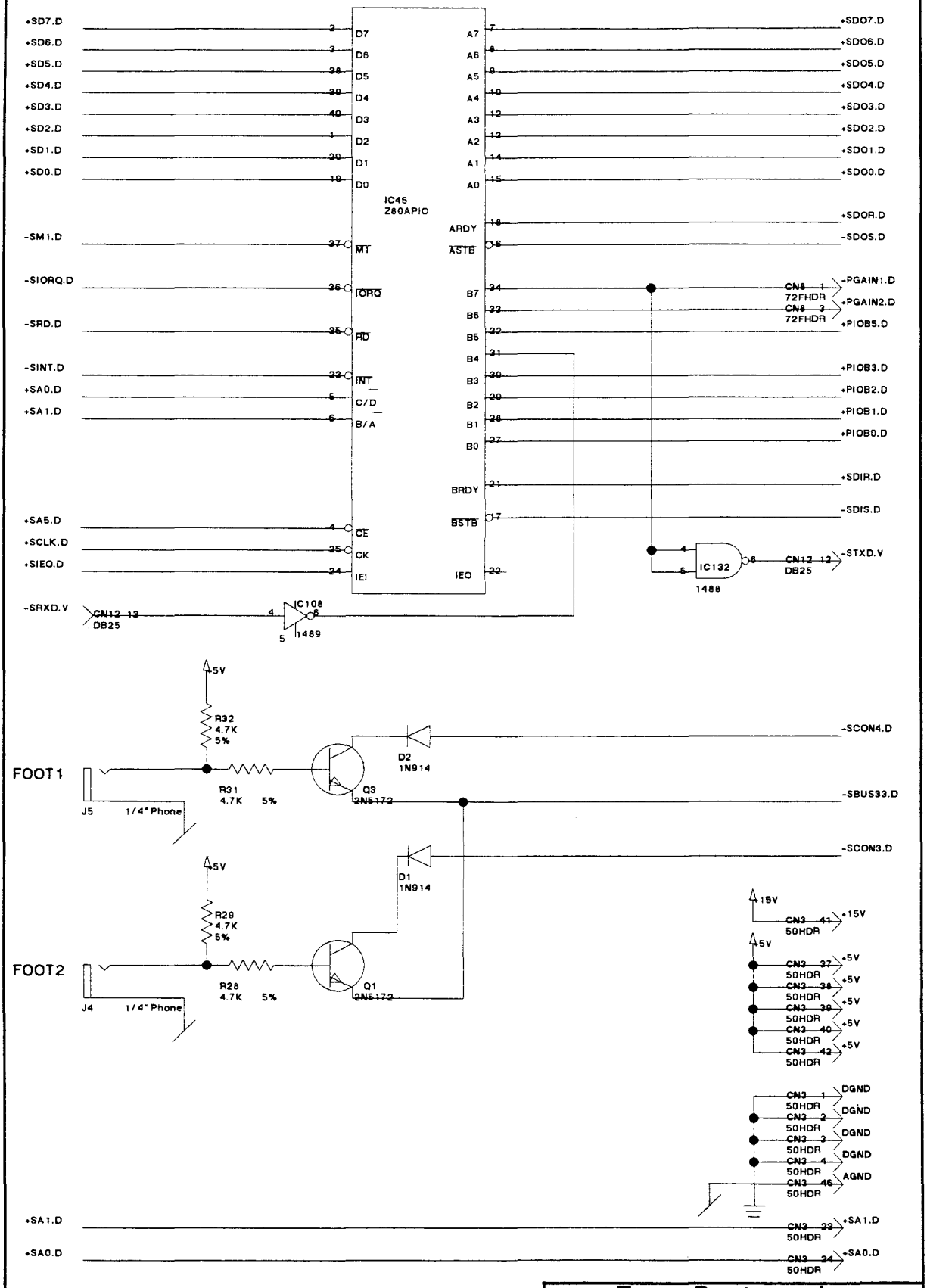

E-mu Systems, Inc.	
Emulator 2 Digital; Scanner- Main Intrfc	
DOC NO S-6149-001 PAGE 4 OF 26	7- 9

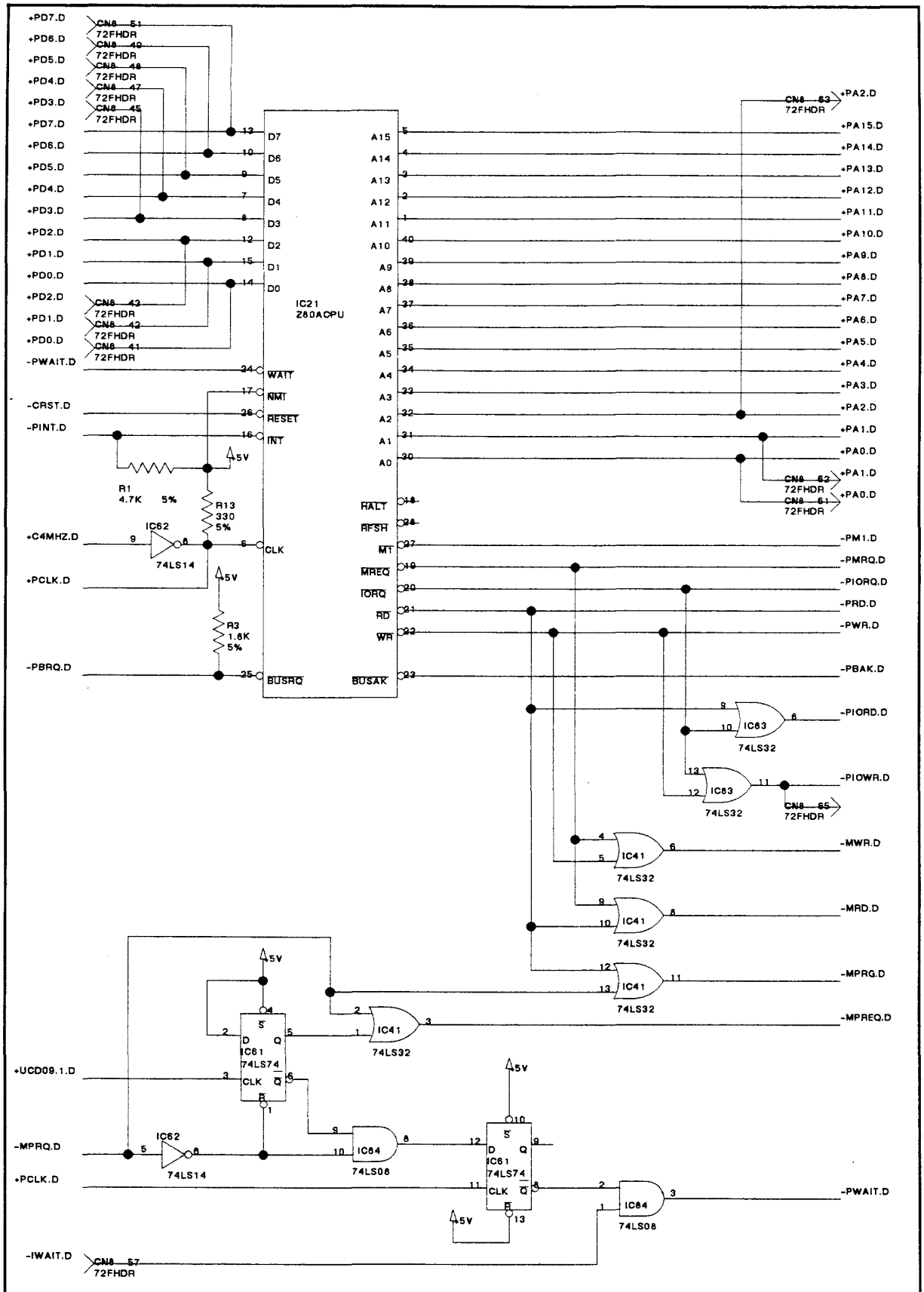

E-mu Systems, Inc.	
Emulator 2 Digital; Main CPU/Dcdr	
DOC NO S-6149-001 PAGE 5 OF 26	7-10

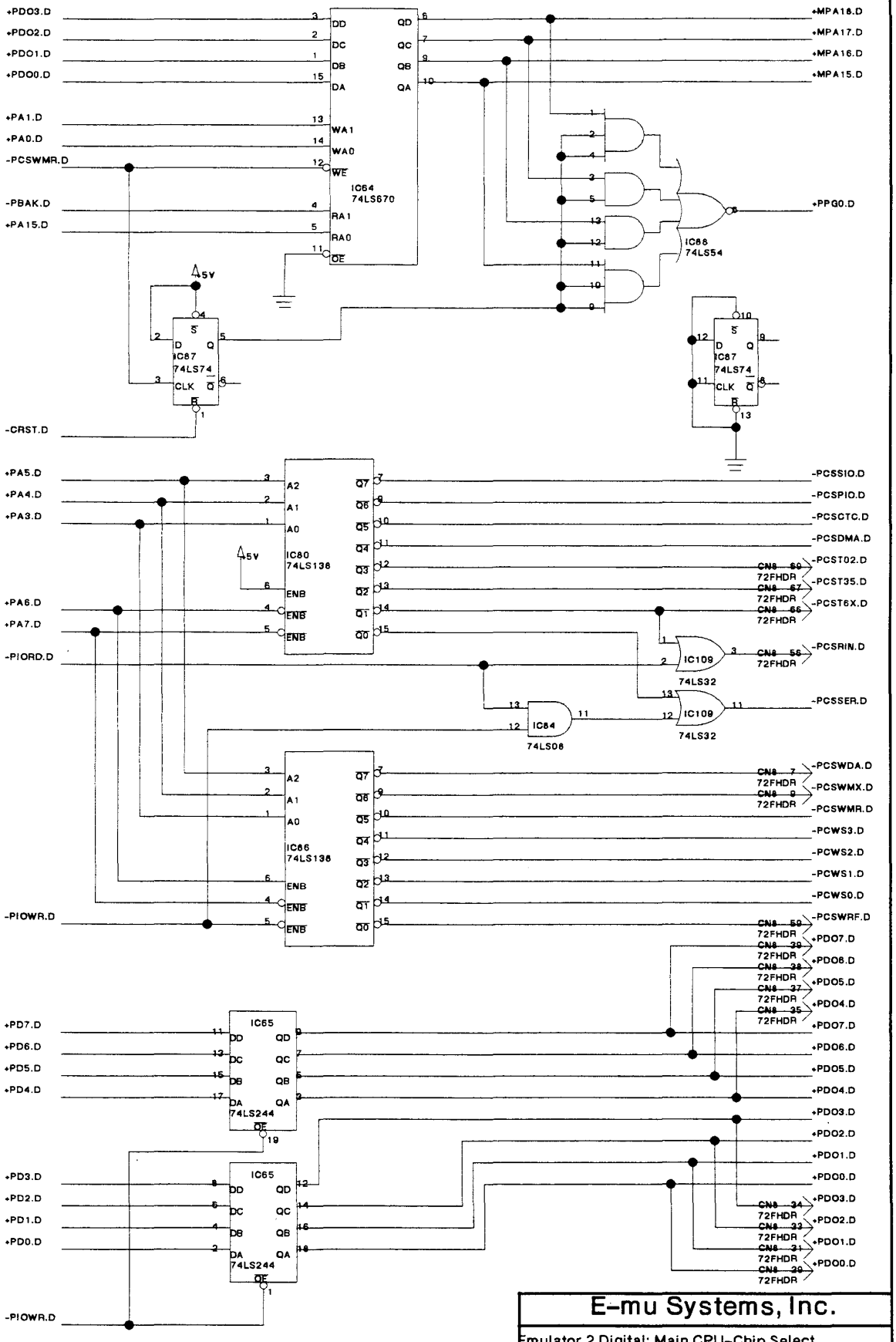

E-mu Systems, Inc.

Emulator 2 Digital; Main CPU-Chip Select

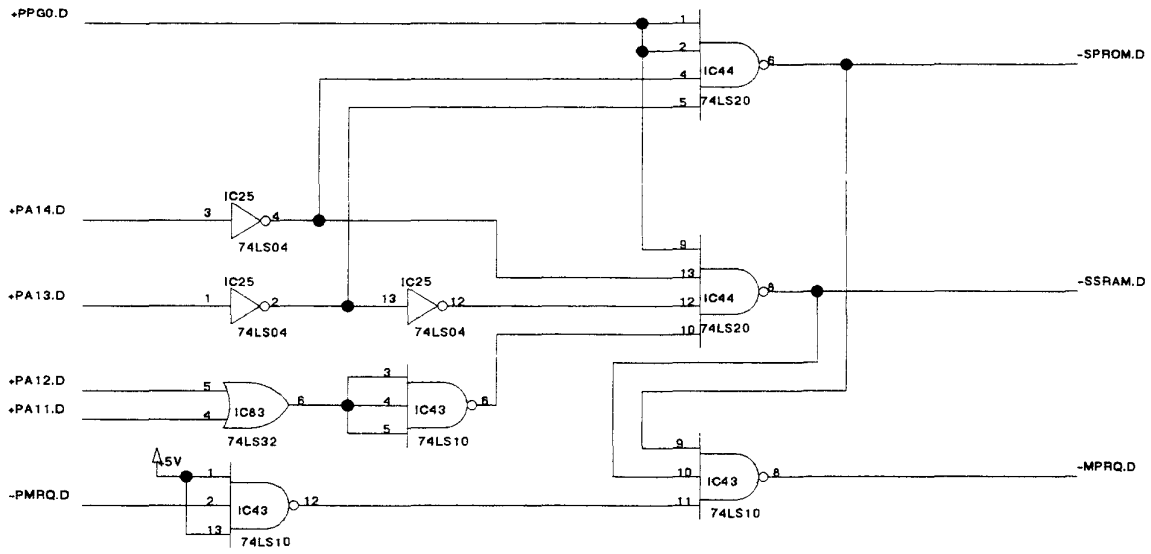
+PPG0.D
IC44
74LS20
-SPROM.D
+PA14.D
IC25
74LS04
+PA13.D
IC25
74LS04
IC25
74LS04
IC44
74LS20
-SSRAM.D
+PA12.D
+PA11.D
IC83
74LS32
IC43
74LS10
+5V
-PMRQ.D
IC43
74LS10
IC43
74LS10
-MPRQ.D

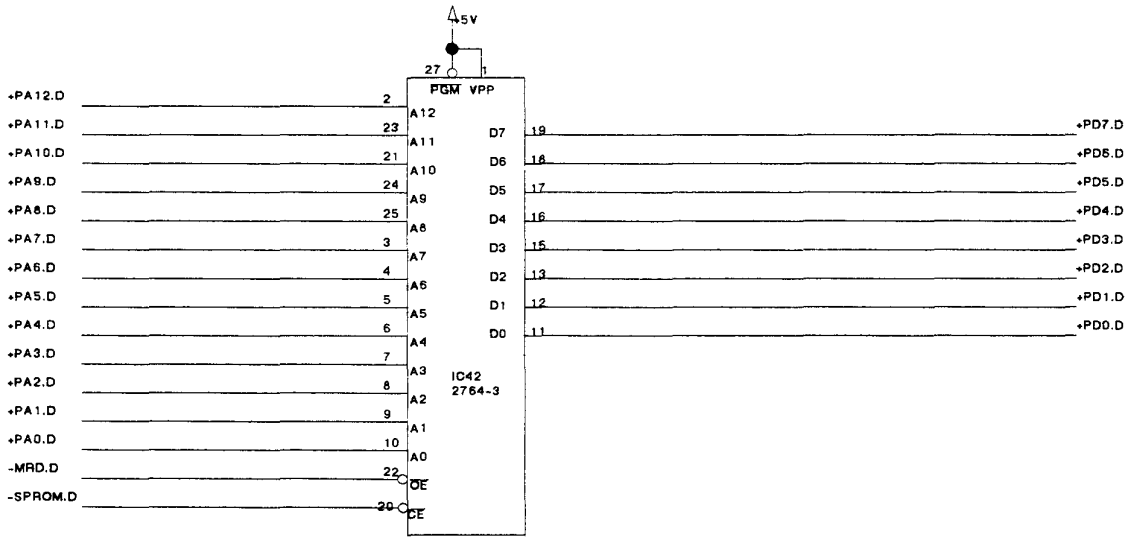
+5V
PGM VPP
+PA12.D
+PA11.D
+PA10.D
+PA9.D
+PA8.D
+PA7.D
+PA6.D
+PA5.D
+PA4.D
+PA3.D
+PA2.D
+PA1.D
+PA0.D
-MRD.D
-SPROM.D
A12
A11
A10
A9
A8
A7
A6
A5
A4
A3
A2
A1
A0
OE
CE
IC42
2764-3
D7
D6
D5
D4
D3
D2
D1
D0
+PD7.D
+PD6.D
+PD5.D
+PD4.D
+PD3.D
+PD2.D
+PD1.D
+PD0.D

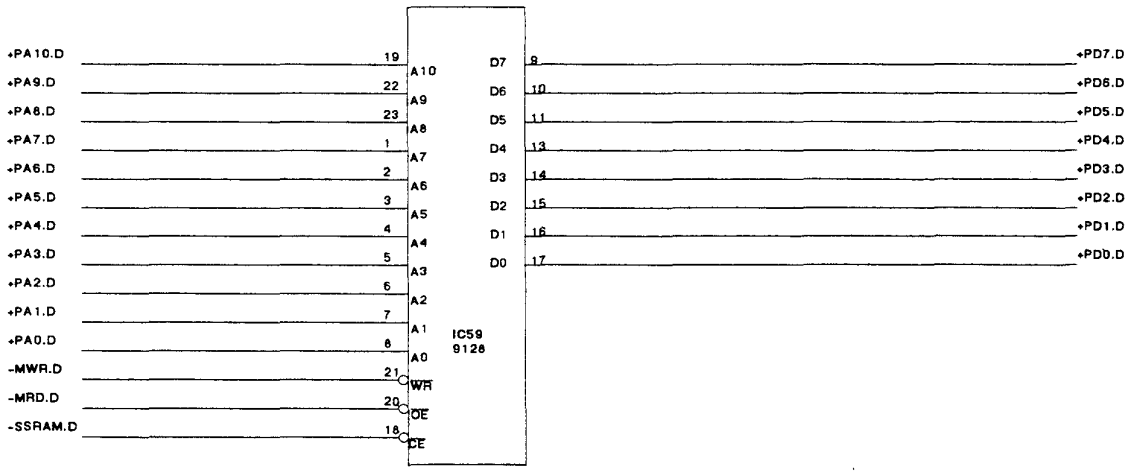
+PA10.D
+PA9.D
+PA8.D
+PA7.D
+PA6.D
+PA5.D
+PA4.D
+PA3.D
+PA2.D
+PA1.D
+PA0.D
-MWR.D
-MRD.D
-SSRAM.D
A10
A9
A8
A7
A6
A5
A4
A3
A2
A1
A0
WR
OE
CE
IC59
9128
D7
D6
D5
D4
D3
D2
D1
D0
+PD7.D
+PD6.D
+PD5.D
+PD4.D
+PD3.D
+PD2.D
+PD1.D
+PD0.D

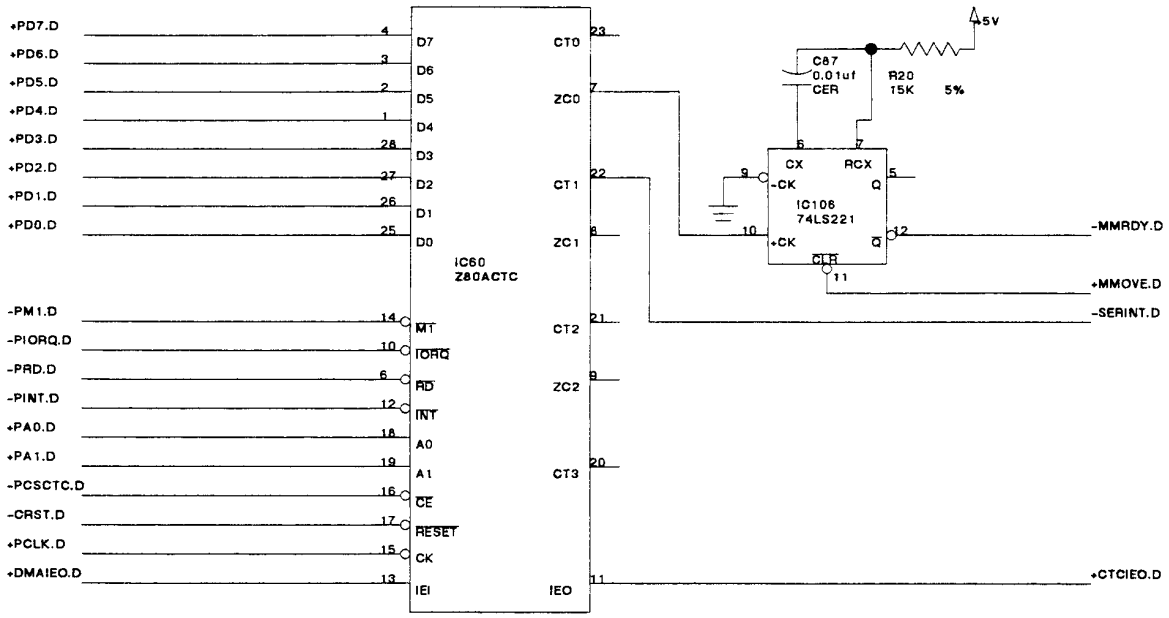

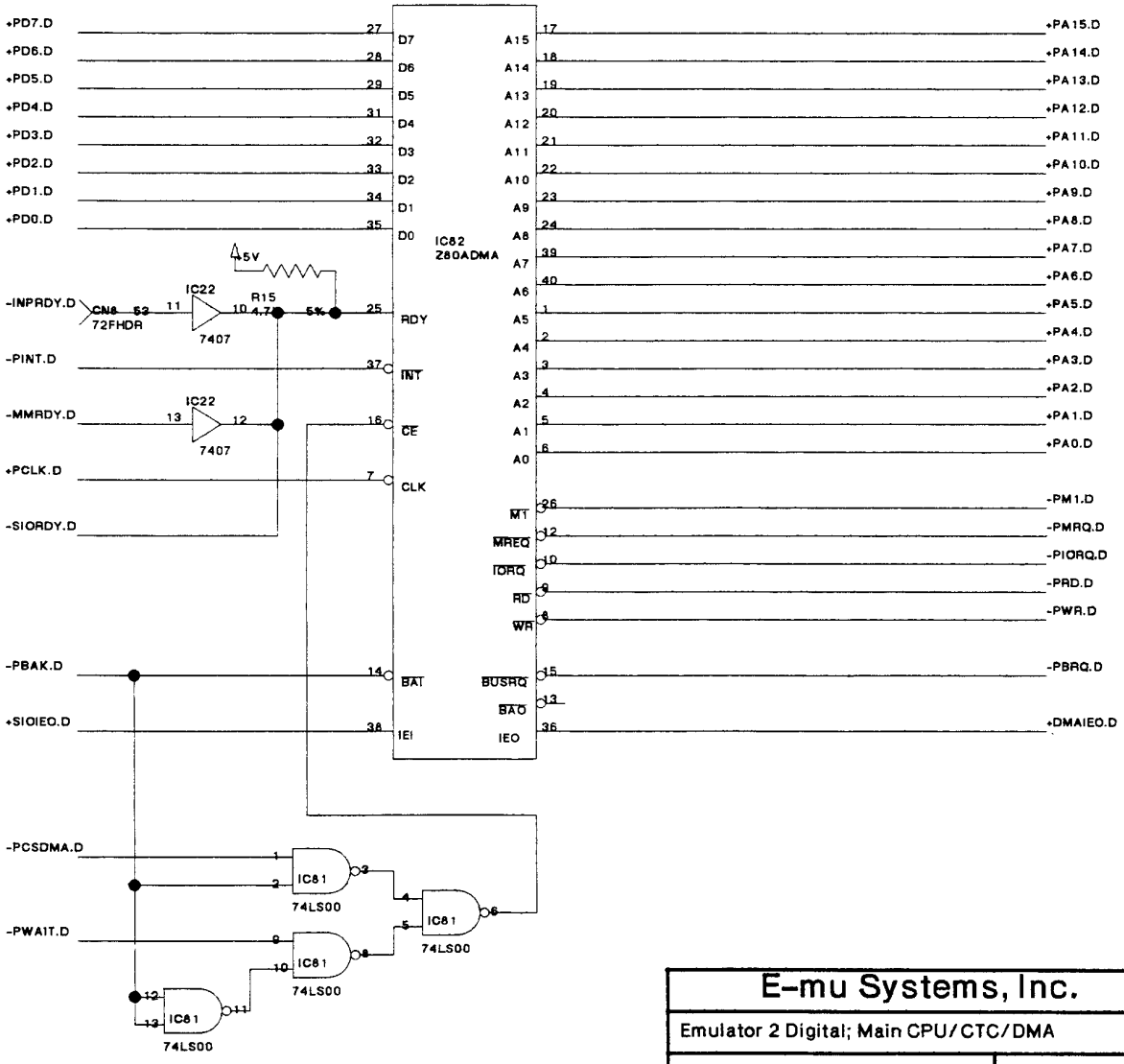

E-mu Systems, Inc.	
Emulator 2 Digital; Main CPU/CTC/DMA	
DOC NO S-6149-001 PAGE 8 OF 26	7-13

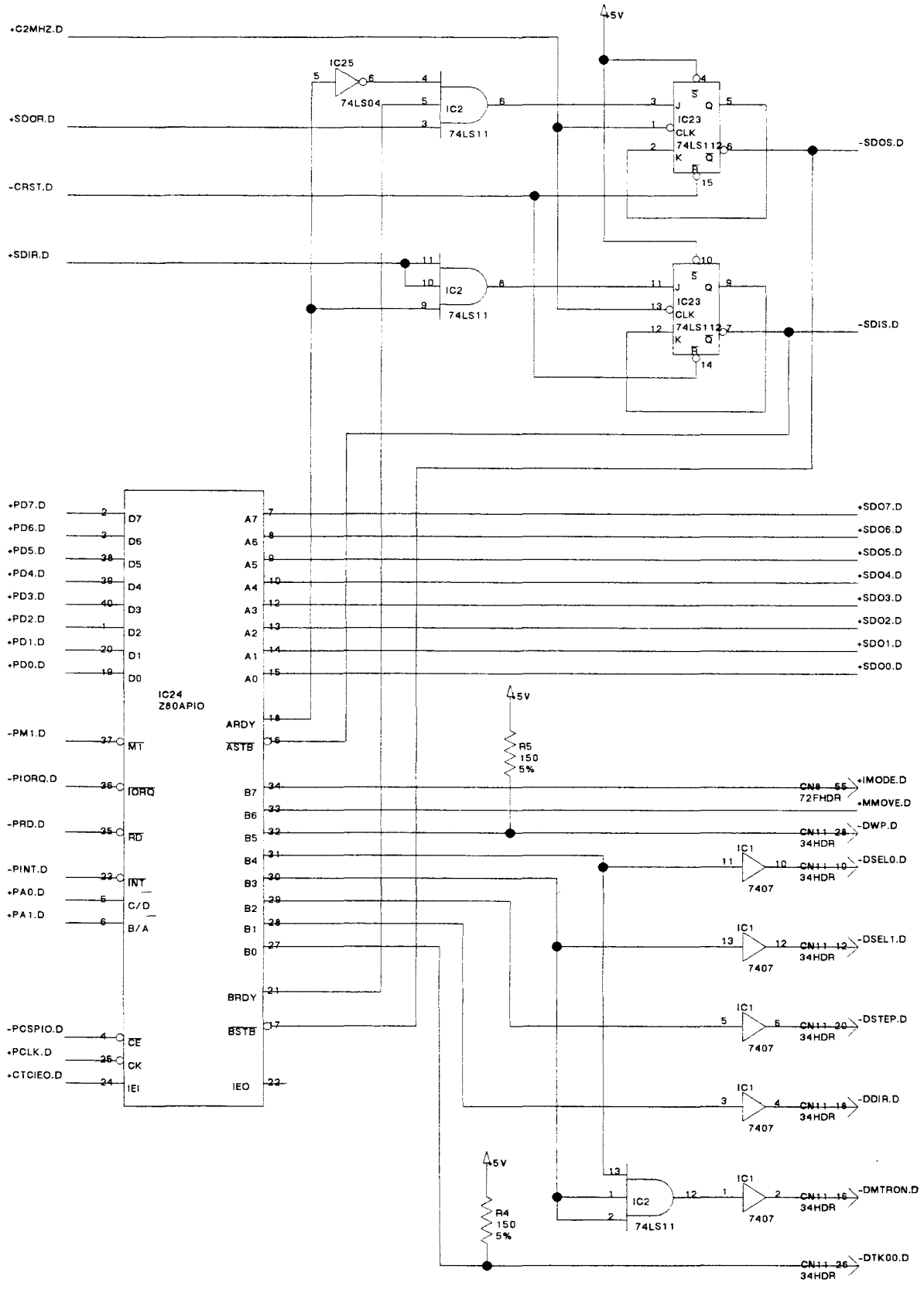

E-mu Systems, Inc.	
Emulator 2 Digital; Main CPU Scan Intrfc	
DOC NO S-6149-001 PAGE 9 OF 26	7-14

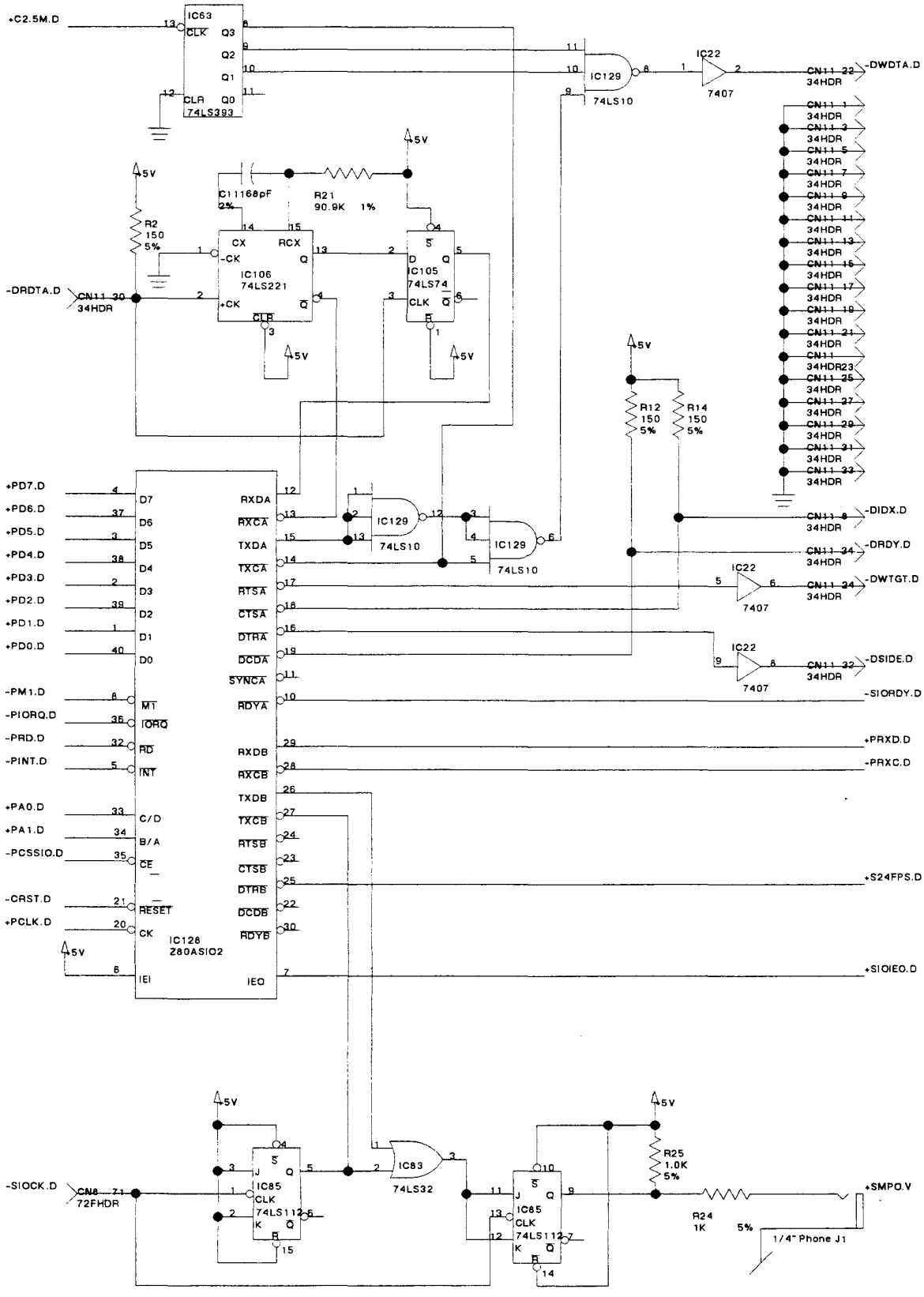

E-mu Systems, Inc.	
Emulator 2 Digital; Disk Interface	
DOC NO S-6149-001 PAGE 10 OF 26	7-15

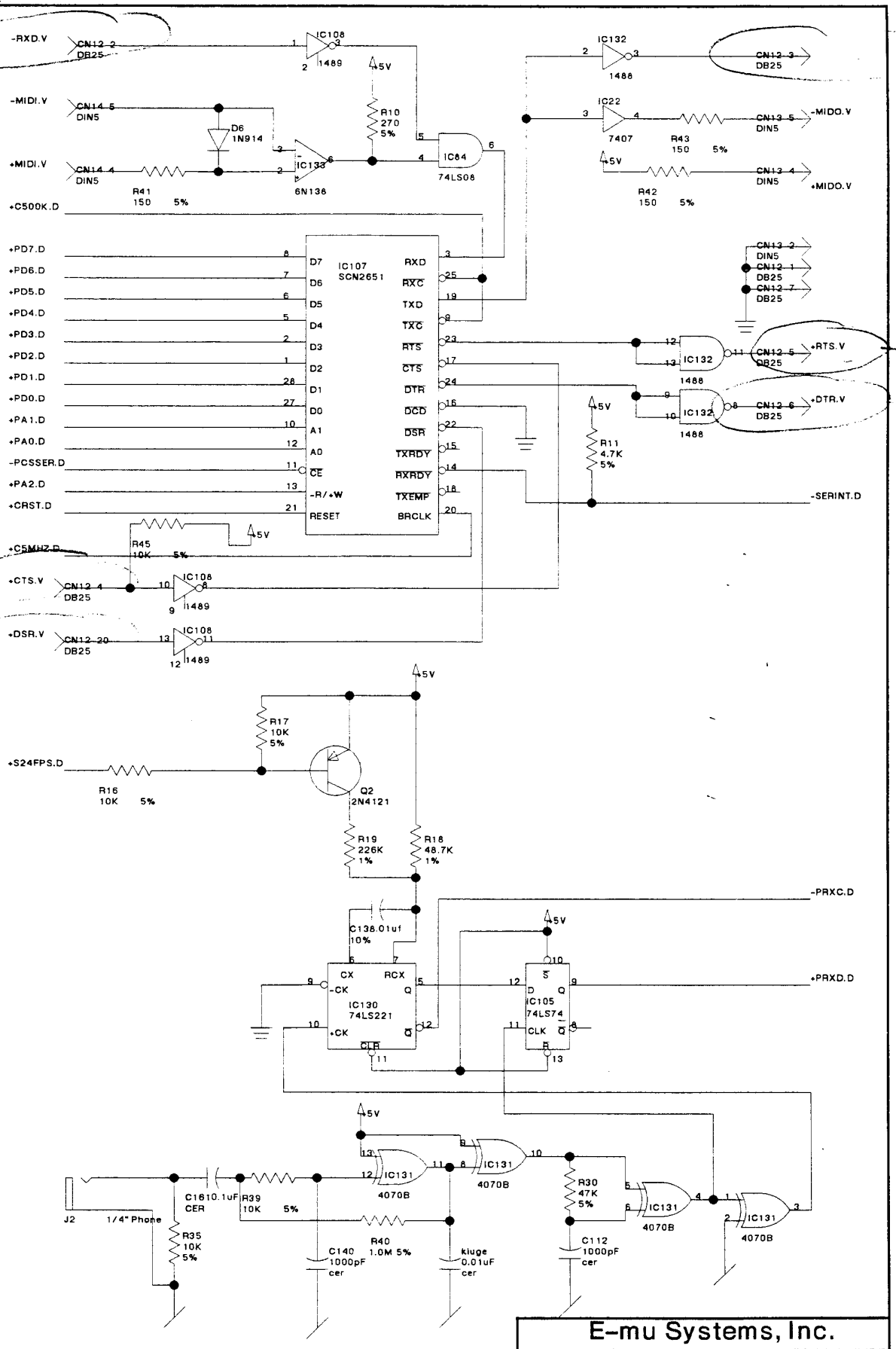

Note: Ground of 4070B to be AGND.

E-mu Systems, Inc.	
Emulator 2 Digital; Serial Interfaces	
DOC NO S-6149-001 PAGE 11 OF 26	7-16

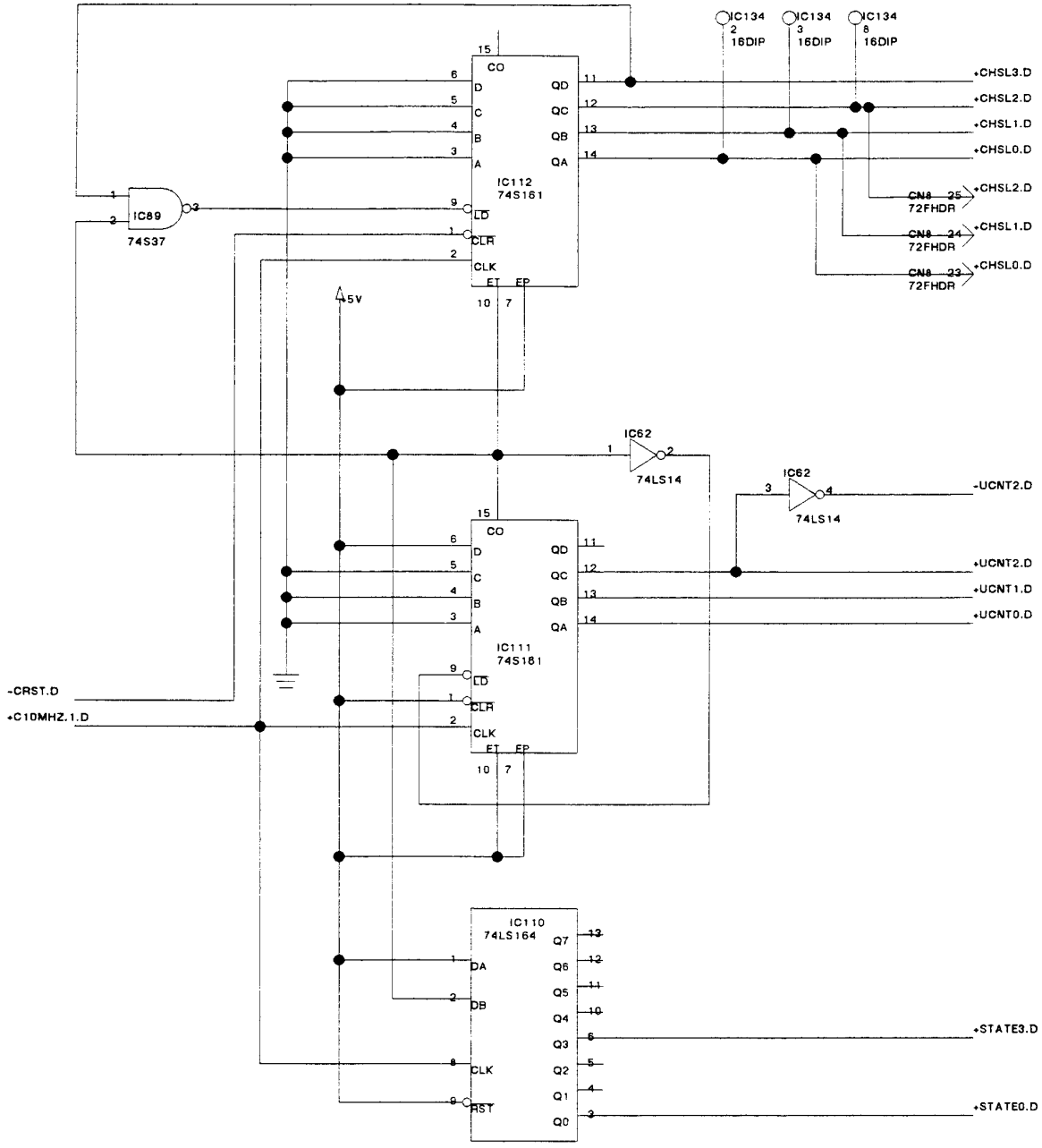

E-mu Systems, Inc.	
Emulator 2 Digital; Microcntrlr State Ctr	
DOC NO S-6149-001 PAGE 12 OF 26	7-17

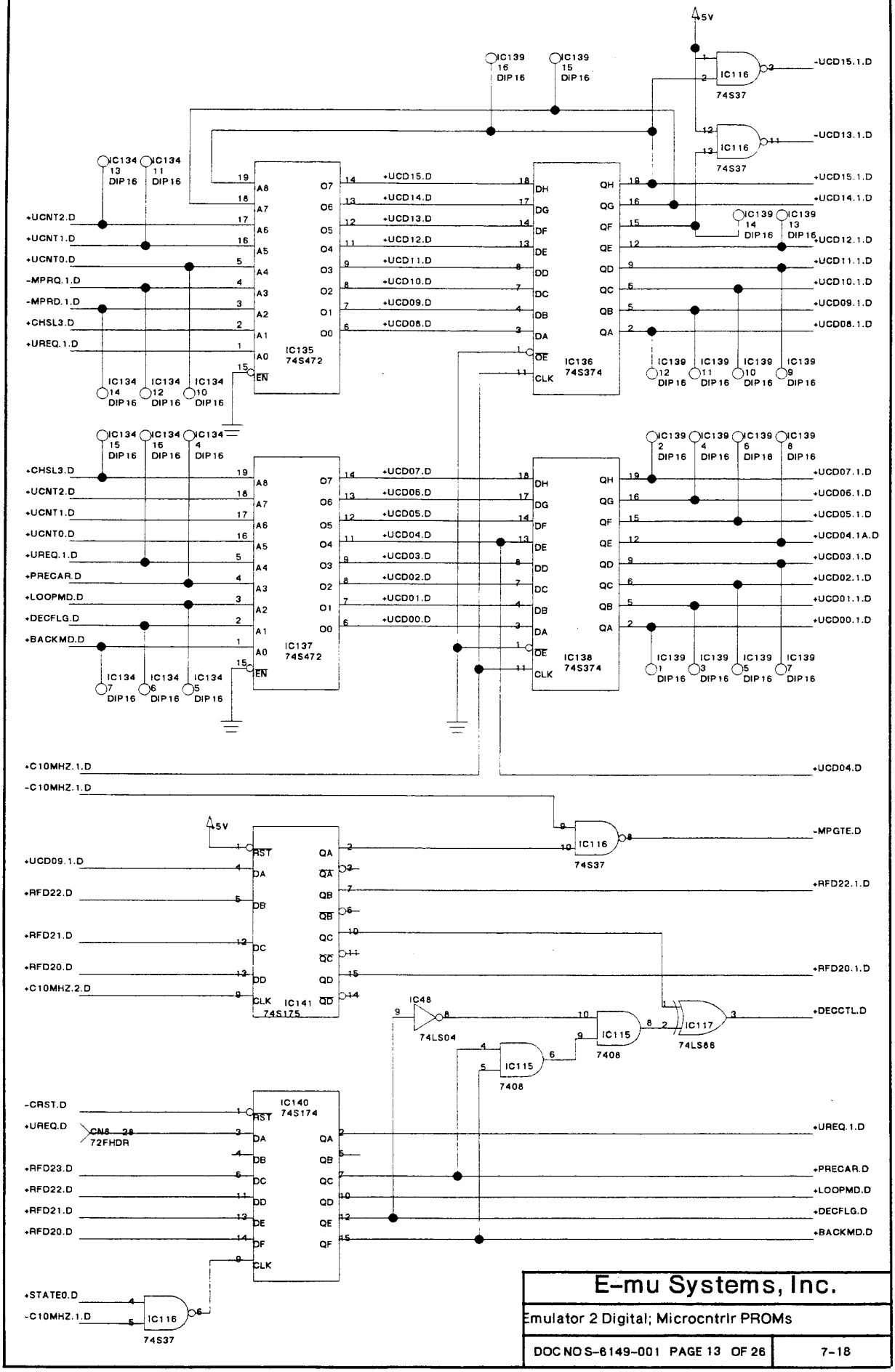

E-mu Systems, Inc.	
Emulator 2 Digital; Microcntrlr PROMs	
DOC NO S-6149-001 PAGE 13 OF 26	7-18

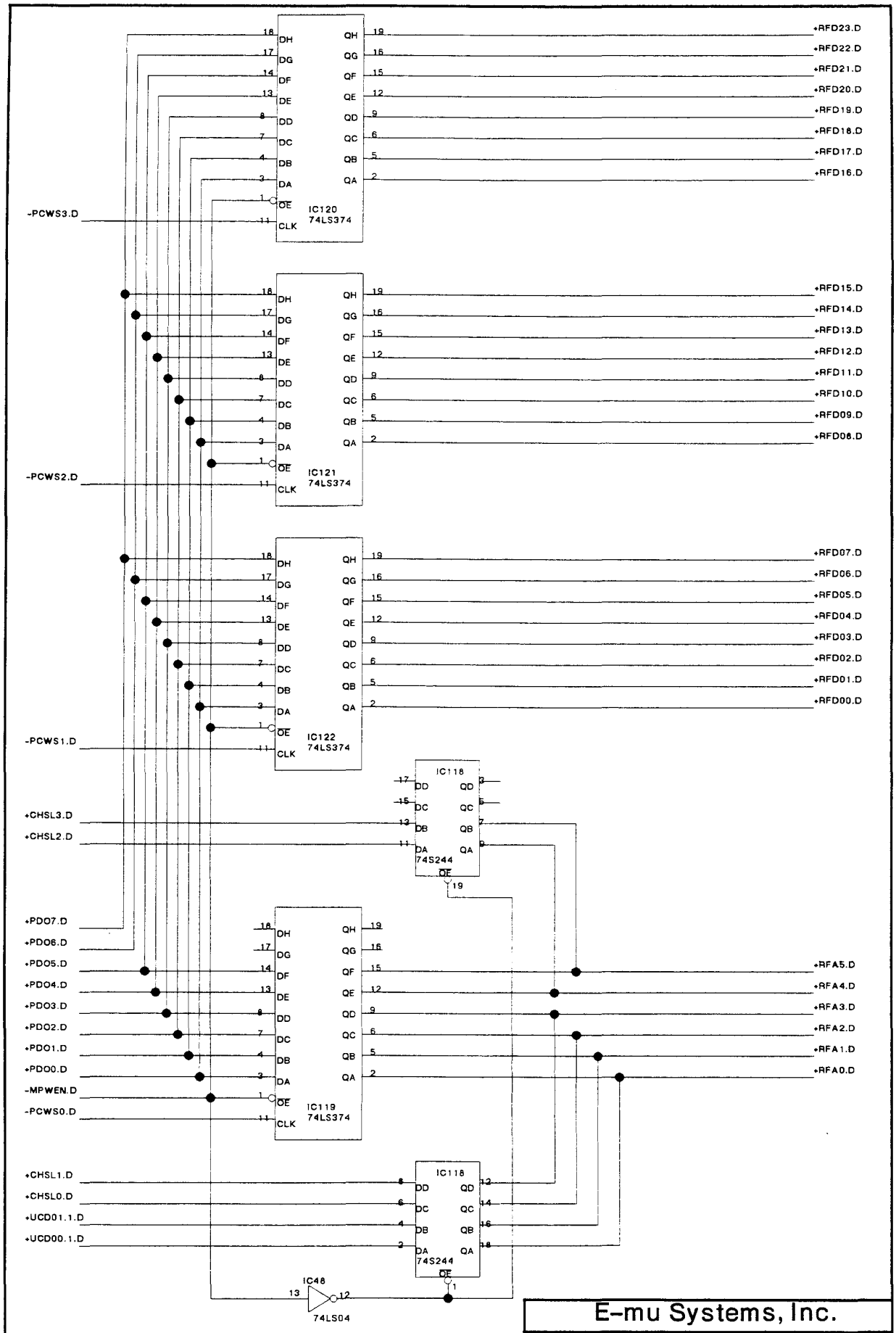

E-mu Systems, Inc.	
Emulator 2 Digital; Microcntrlr/CPU Intrfc	
DOC NO S-6149-001 PAGE 14 OF 26	7-19

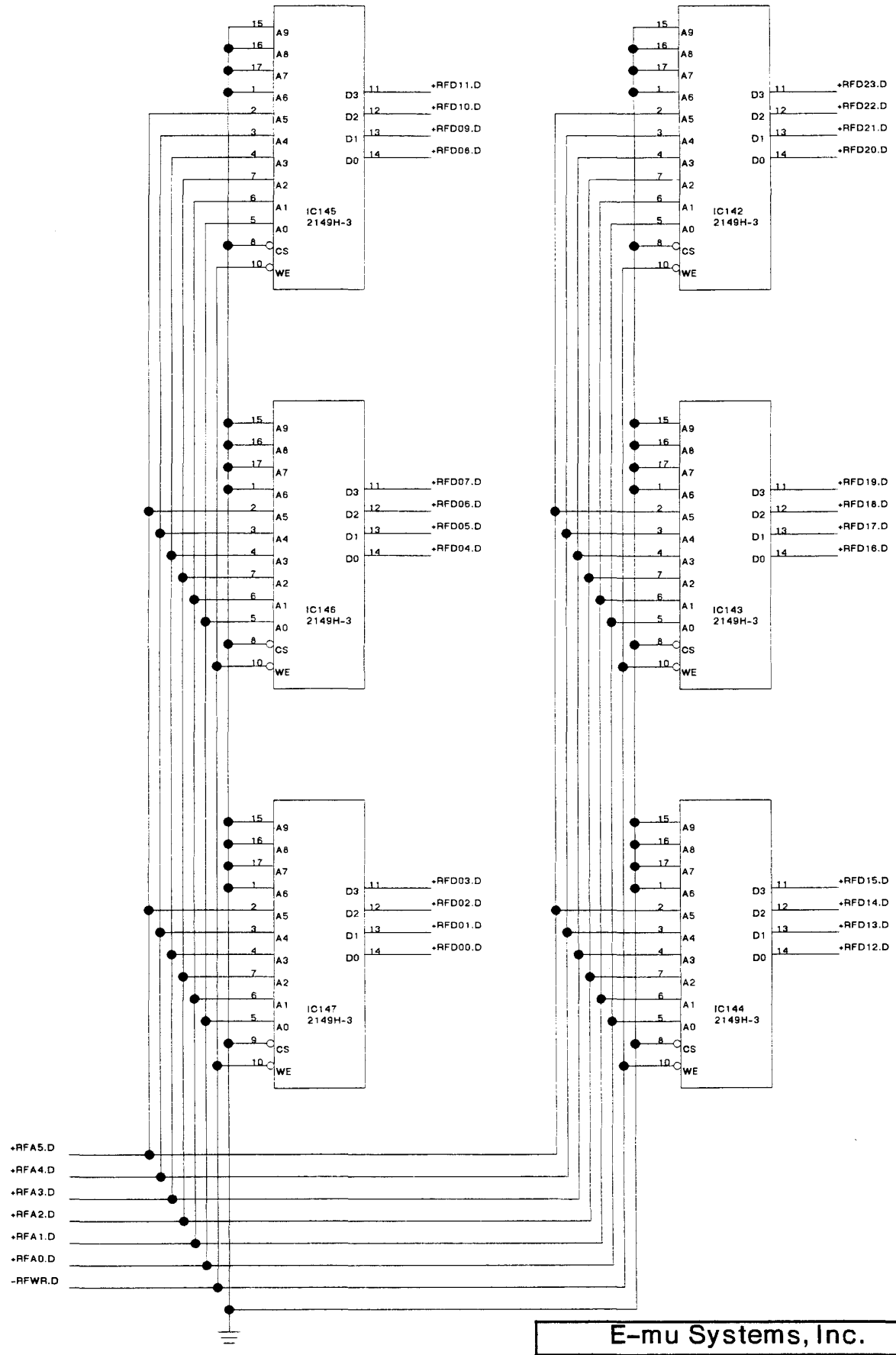
IC145
2149H-3
IC142
2149H-3
IC146
2149H-3
IC143
2149H-3
IC147
2149H-3
IC144
2149H-3
A9
A8
A7
A6
A5
A4
A3
A2
A1
A0
CS
WE
D3
D2
D1
D0
+RFD11.D
+RFD10.D
+RFD09.D
+RFD08.D
+RFD23.D
+RFD22.D
+RFD21.D
+RFD20.D
+RFD07.D
+RFD06.D
+RFD05.D
+RFD04.D
+RFD19.D
+RFD18.D
+RFD17.D
+RFD16.D
+RFD03.D
+RFD02.D
+RFD01.D
+RFD00.D
+RFD15.D
+RFD14.D
+RFD13.D
+RFD12.D
+RFA5.D
+RFA4.D
+RFA3.D
+RFA2.D
+RFA1.D
+RFA0.D
-RFWR.D

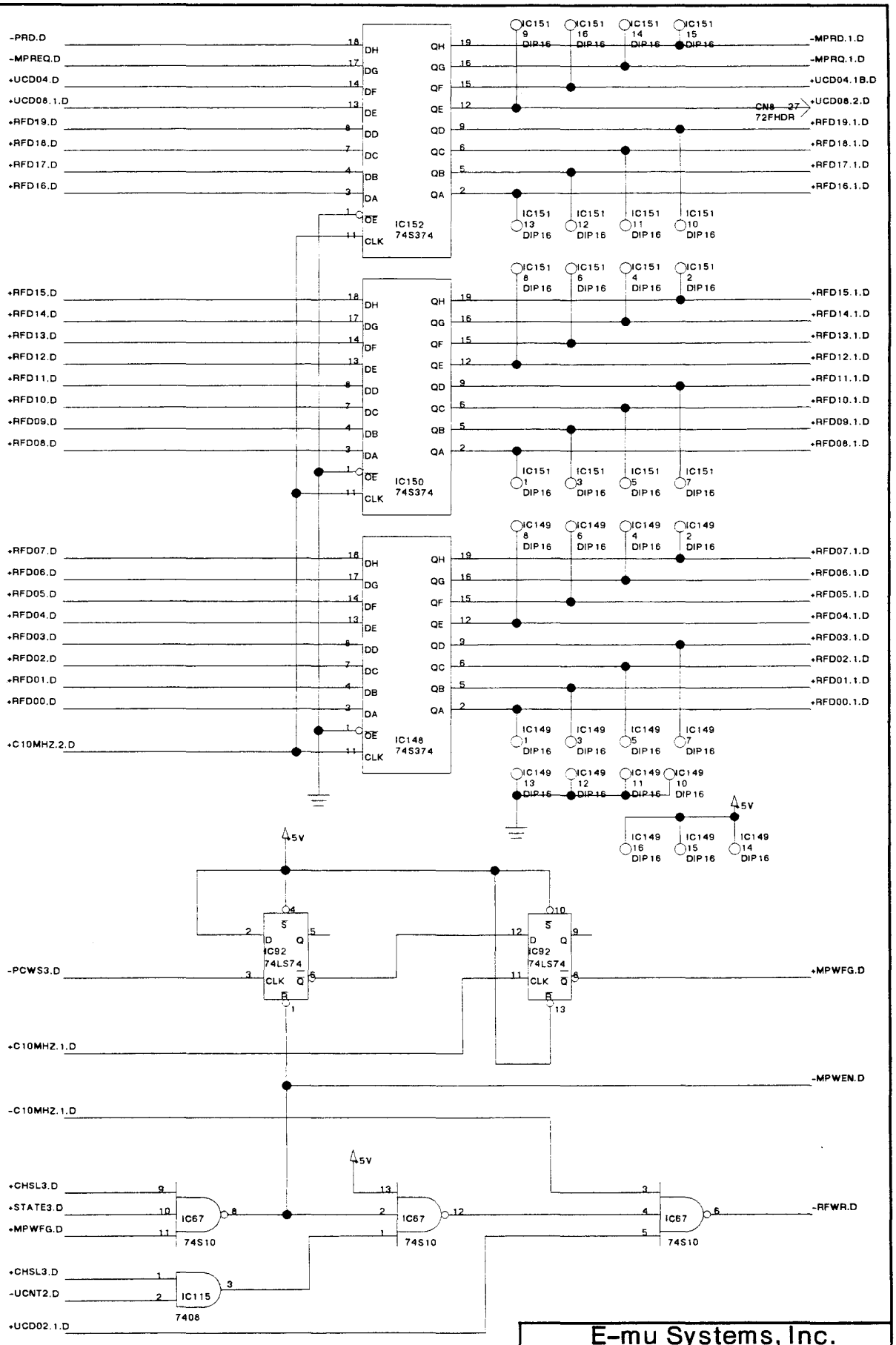

E-mu Systems, Inc.

Emulator 2 Digital; Microcntrlr Pipeline

DOC NO S-6149-001 PAGE 16 OF 26 | 7-21

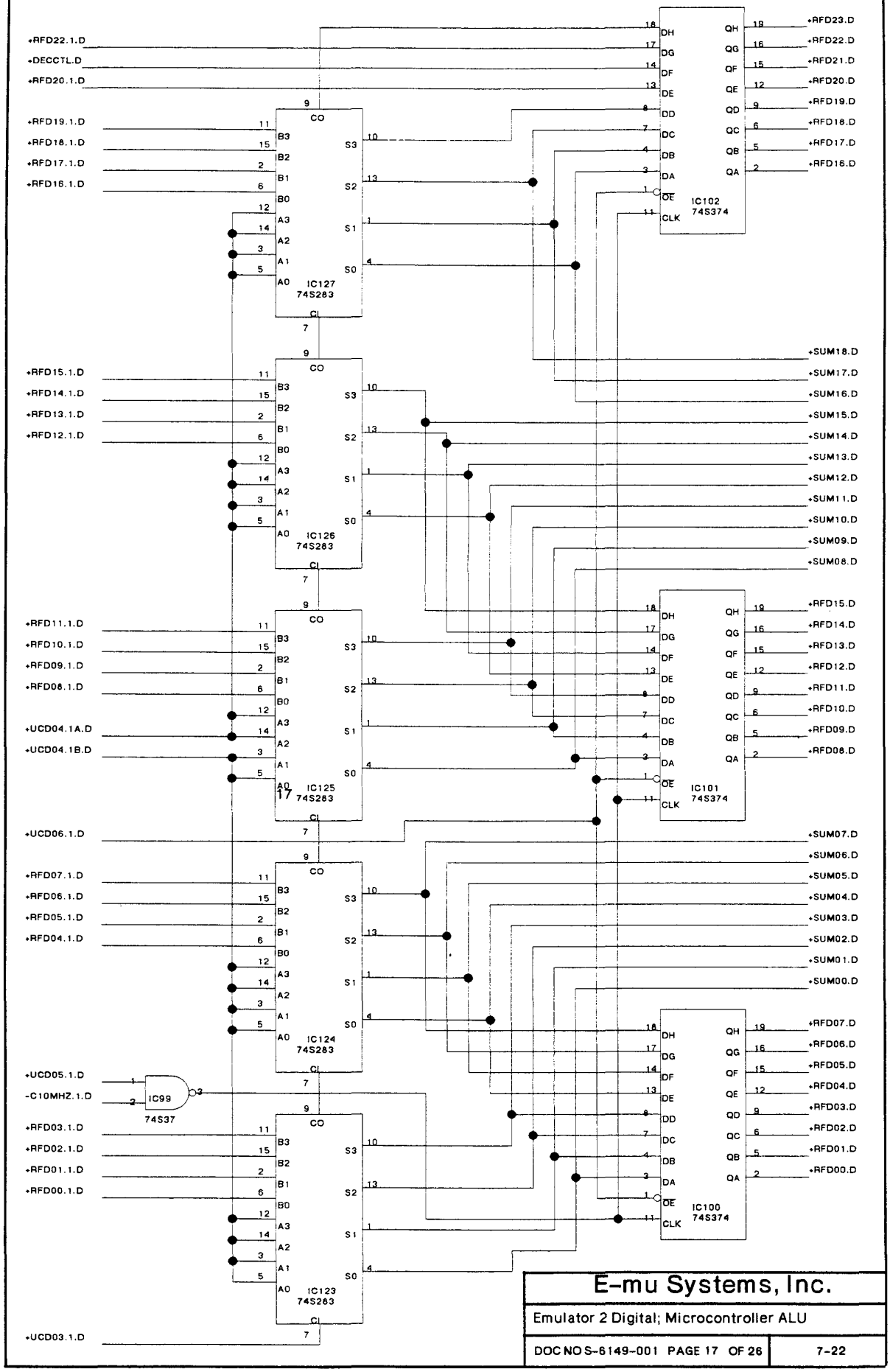

E-mu Systems, Inc.

Emulator 2 Digital; Microcontroller ALU

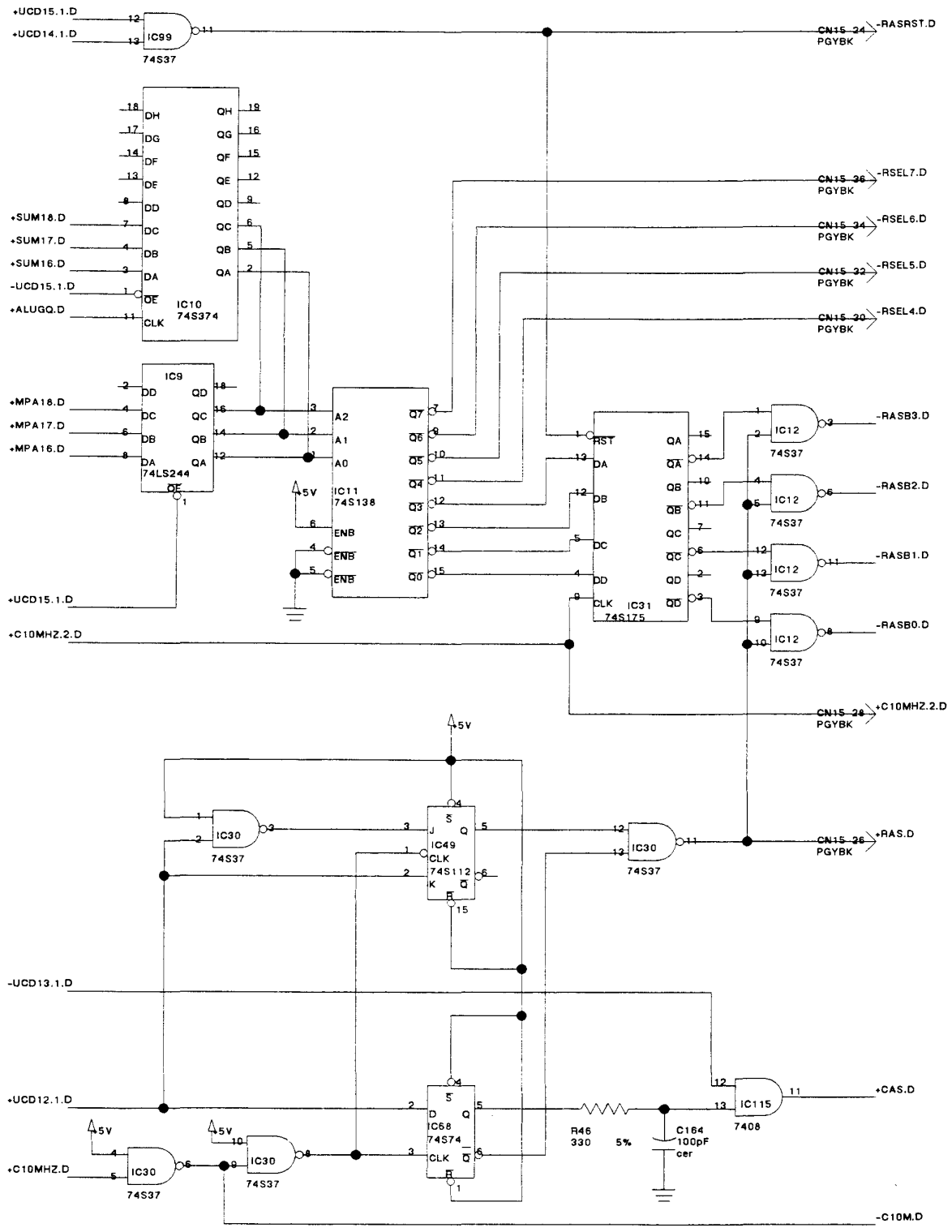

E-mu Systems, Inc.	
Emulator 2 Digital; RAM Timing	
DOC NO S-6149-001 PAGE 18 OF 26	7-23

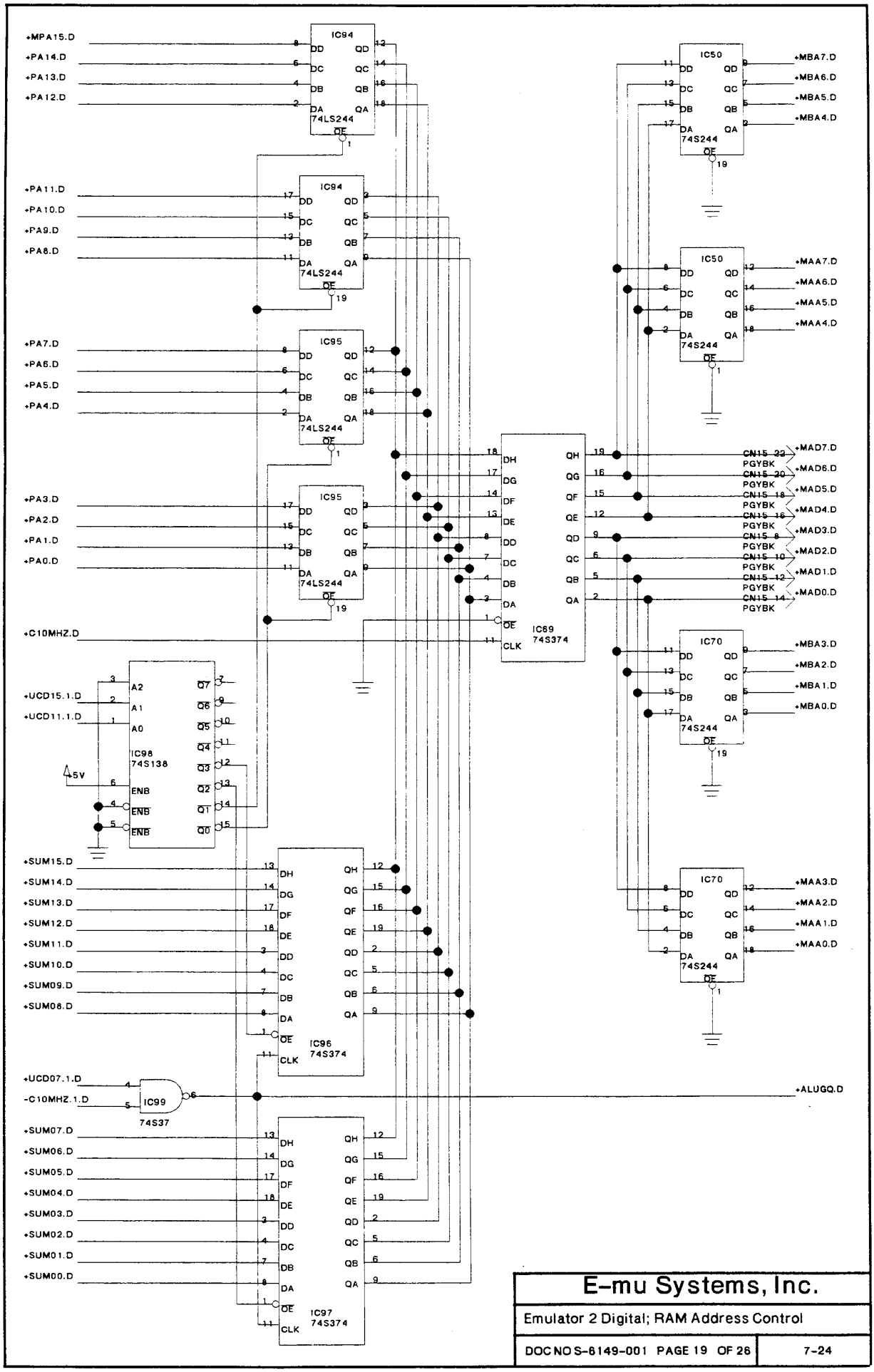

E-mu Systems, Inc.	
Emulator 2 Digital; RAM Address Control	
DOC NO S-6149-001 PAGE 19 OF 28	7-24

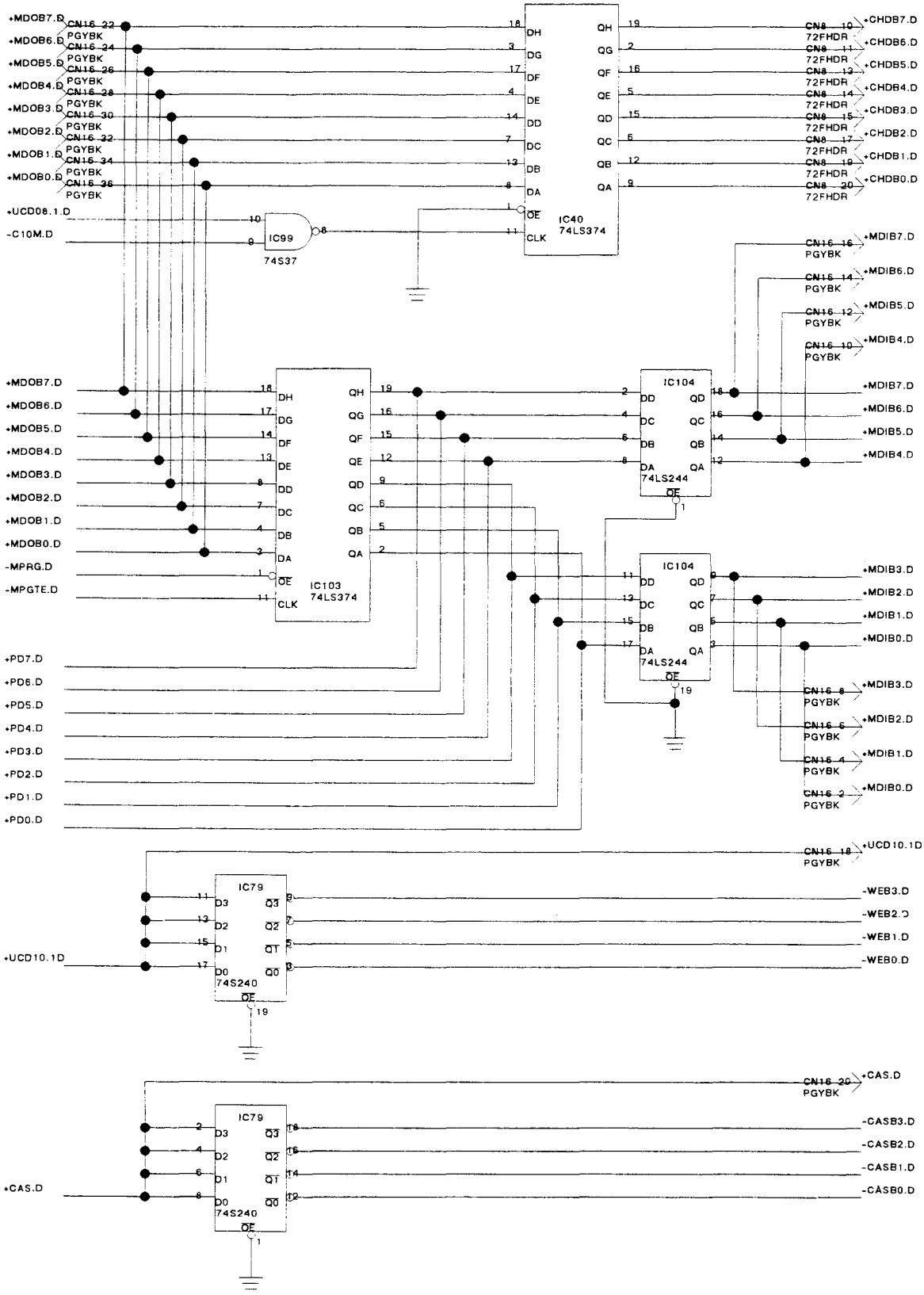

E-mu Systems, Inc.	
Emulator 2 Digital; RAM Buffering	
DOC NO S-6149-001 PAGE 20 OF 26	7-25

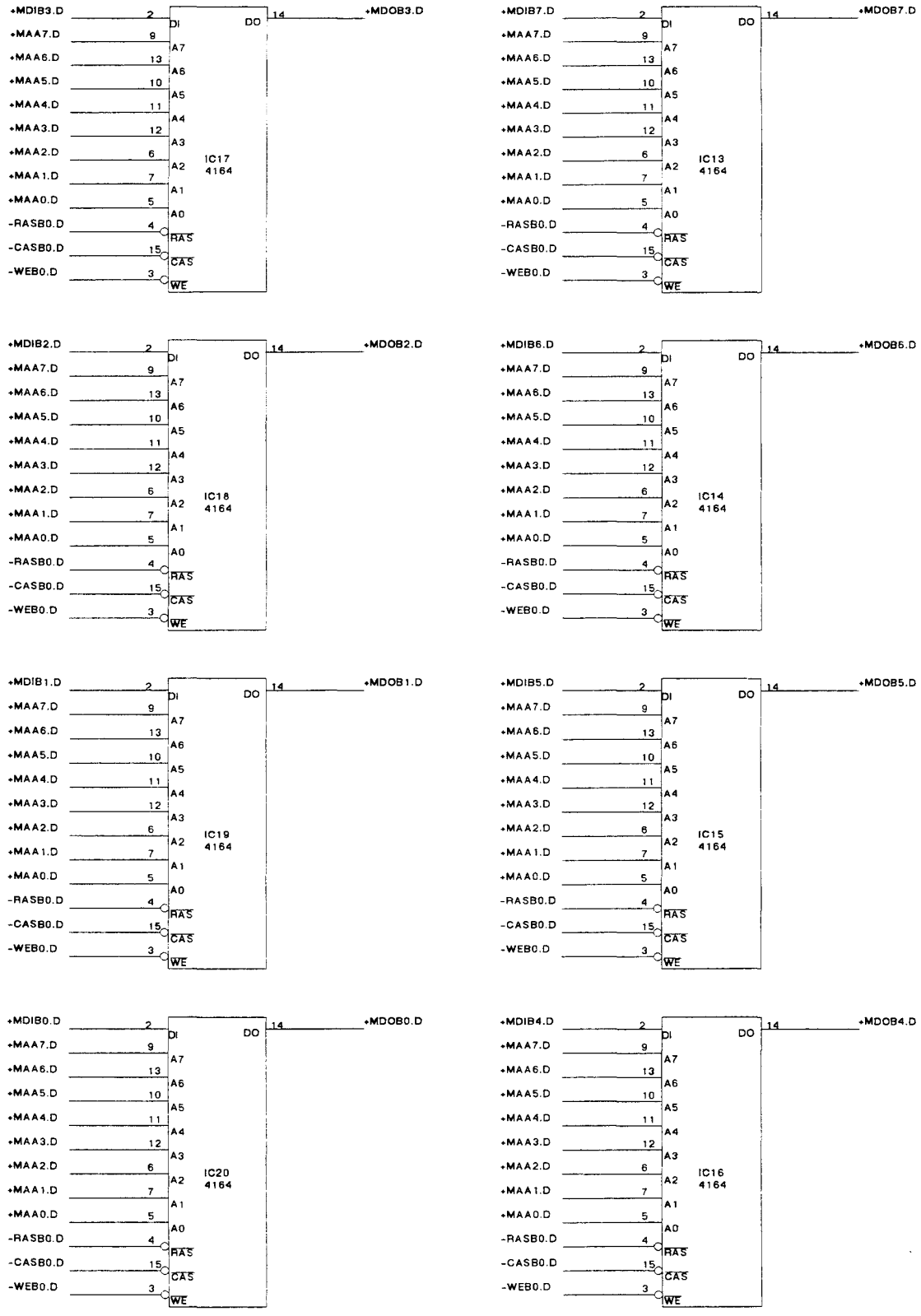

E-mu Systems, Inc.	
Emulator 2 Digital; Dynamic RAM	
DOC NO S-6149-001 PAGE 21 OF 26	7-26

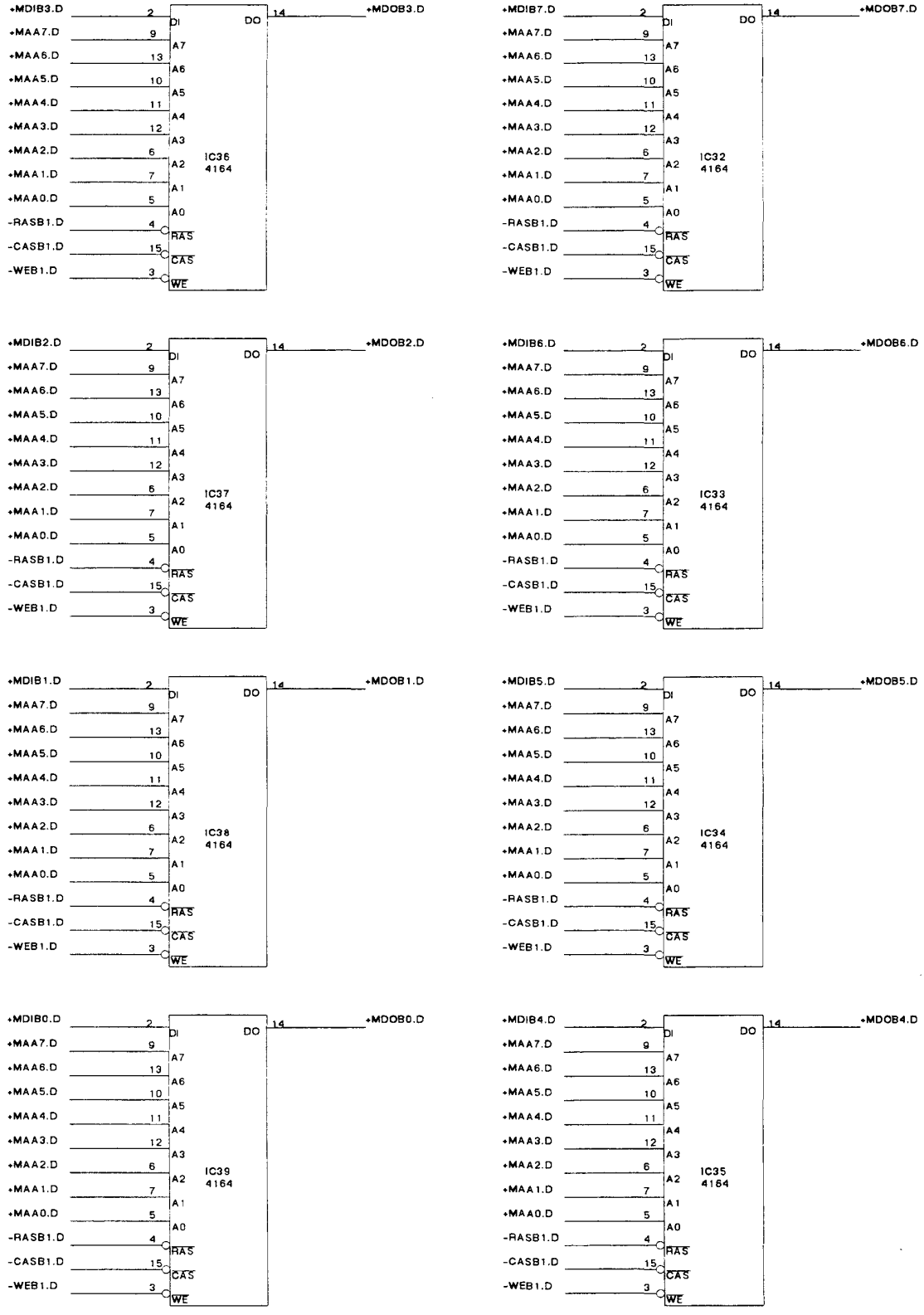

E-mu Systems, Inc.	
Emulator 2 Digital; Dynamic RAM	
DOC NO S-6149-001 PAGE 22 OF 26	7-27

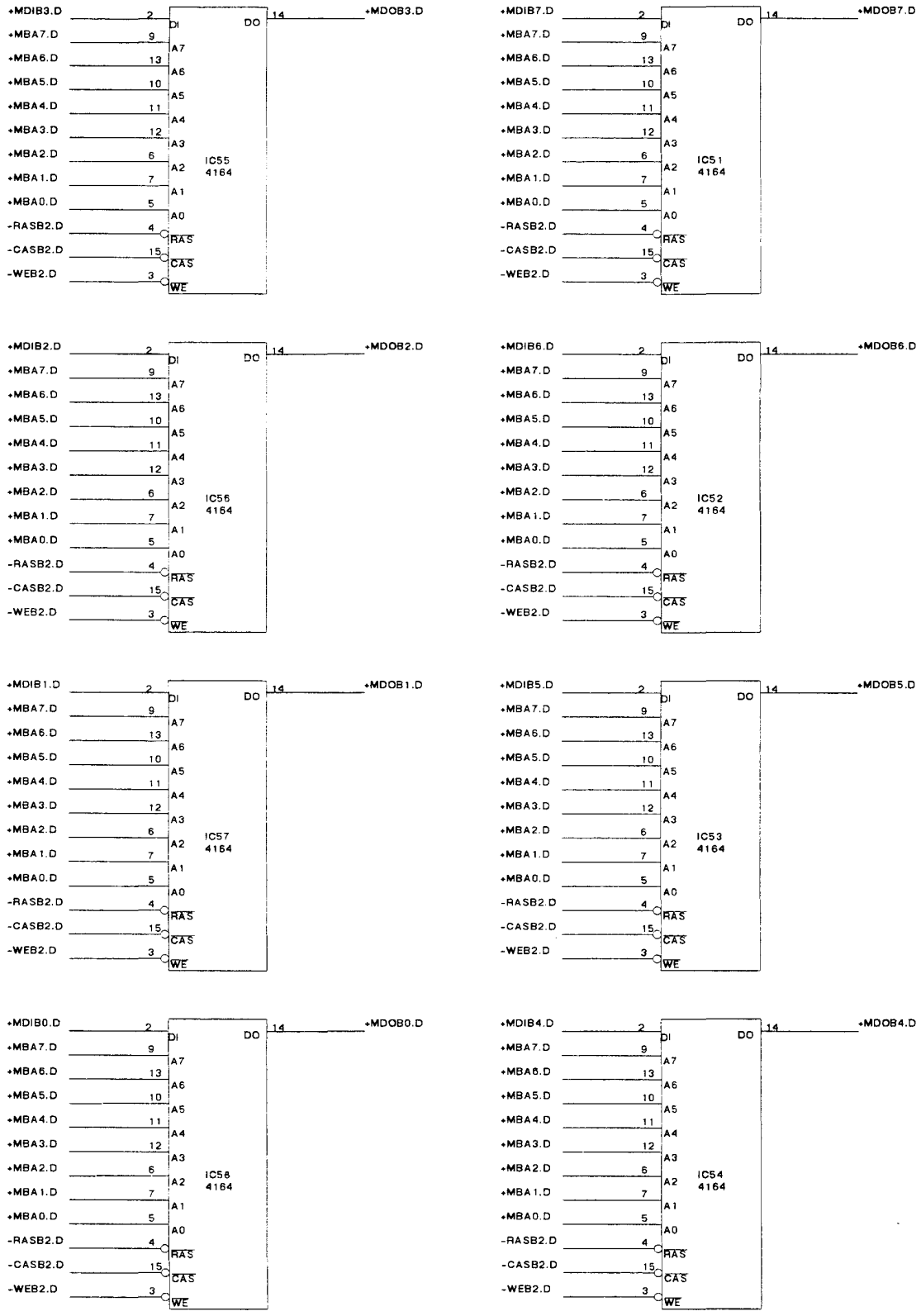

E-mu Systems, Inc.	
Emulator 2 Digital; Dynamic RAM	
DOC NO S-6149-001 PAGE 23 OF 26	7-28

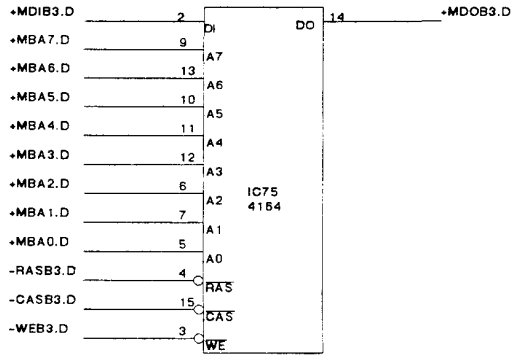

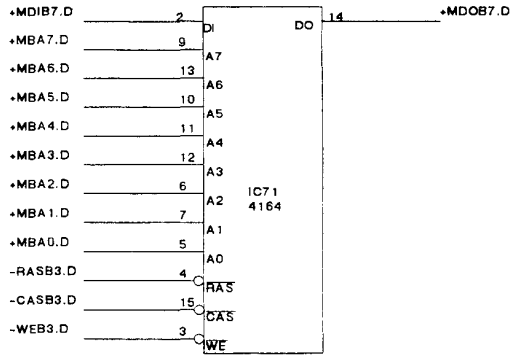

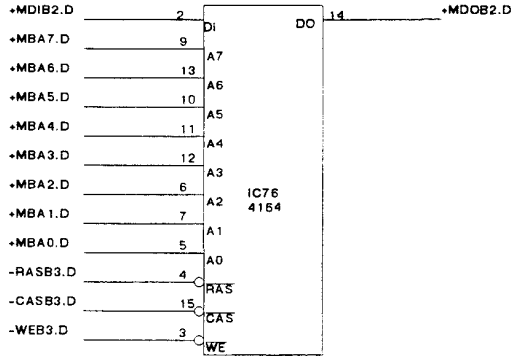

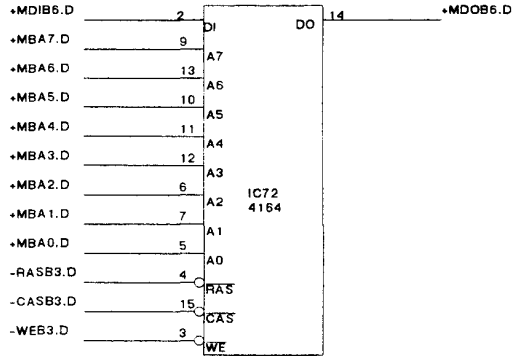

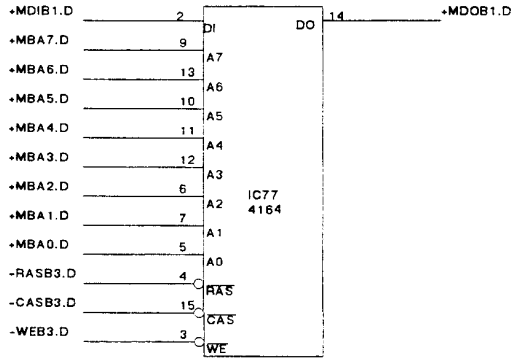

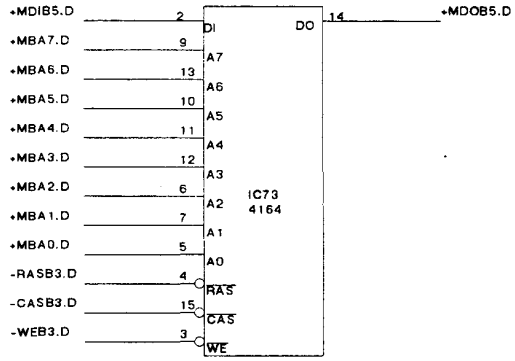

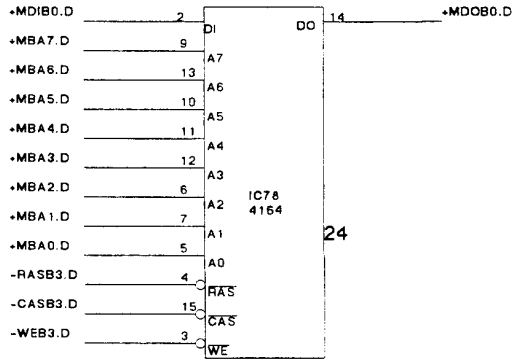

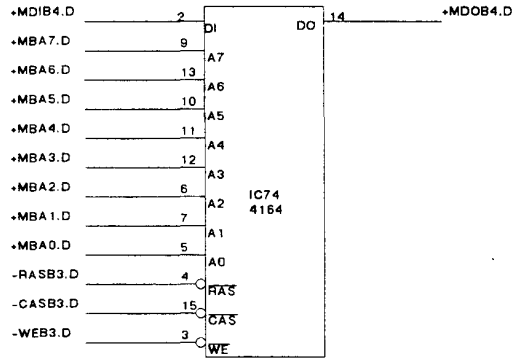

E-mu Systems, Inc.	
Emulator 2 Digital; Dynamic RAM	
DOC NO S-6149-001 PAGE 24 OF 26	7-29

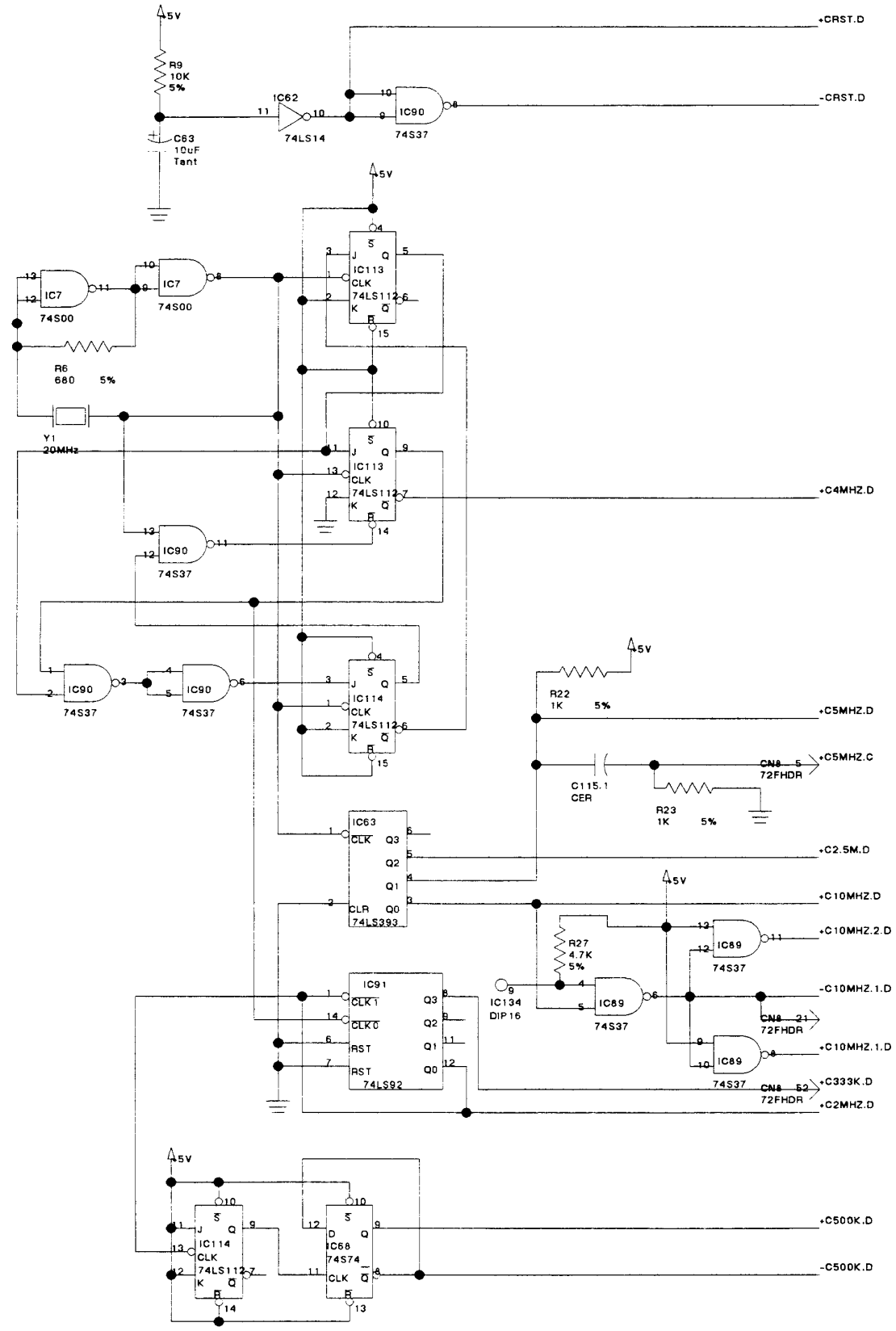

E-mu Systems, Inc.	
Emulator 2 Digital; Clocks & Reset	
DOC NO S-6149-001 PAGE 25 OF 26	7-30

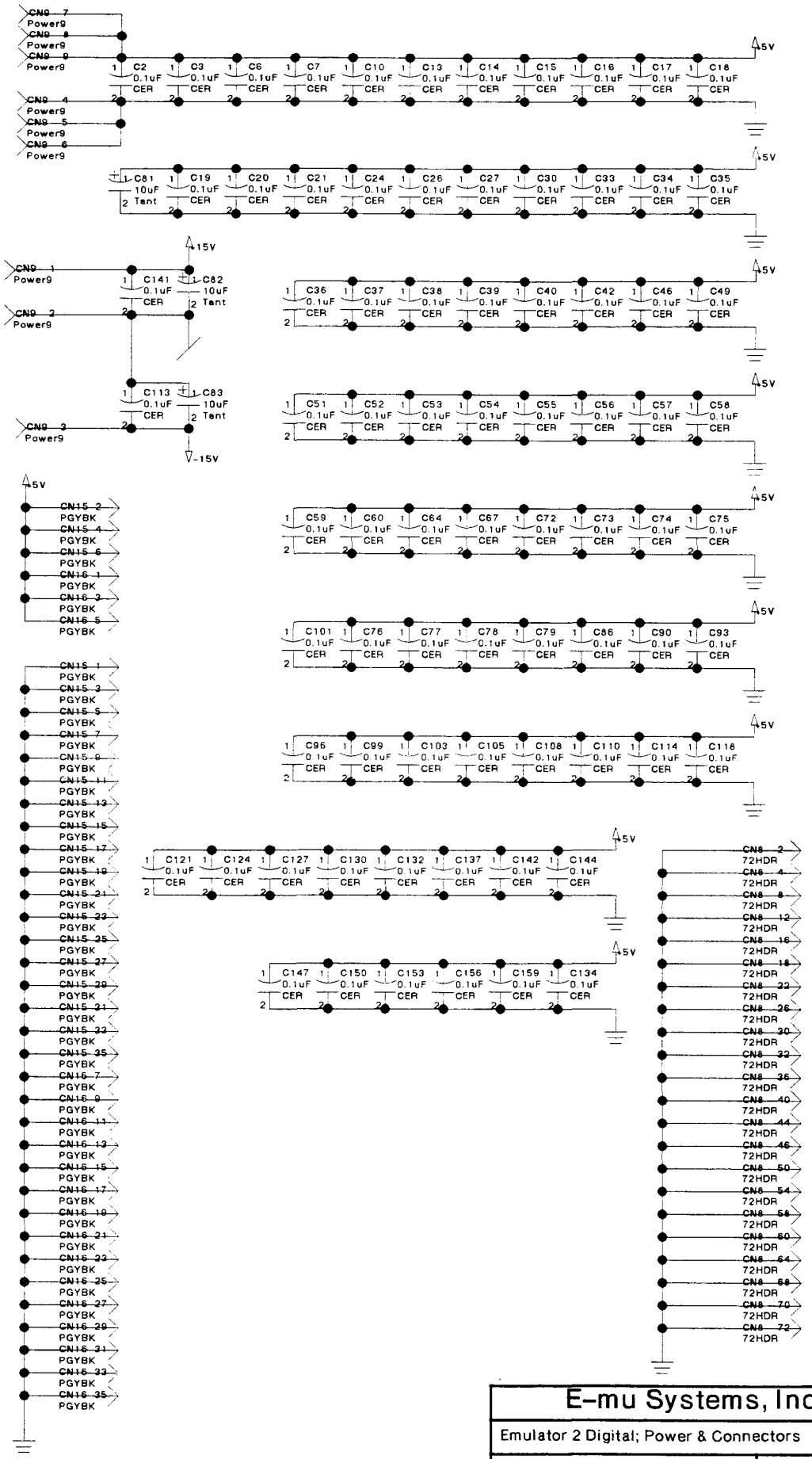

E-mu Systems, Inc.	
Emulator 2 Digital; Power & Connectors	
DOC NO S-6149-001 PAGE 26 OF 26	7-31

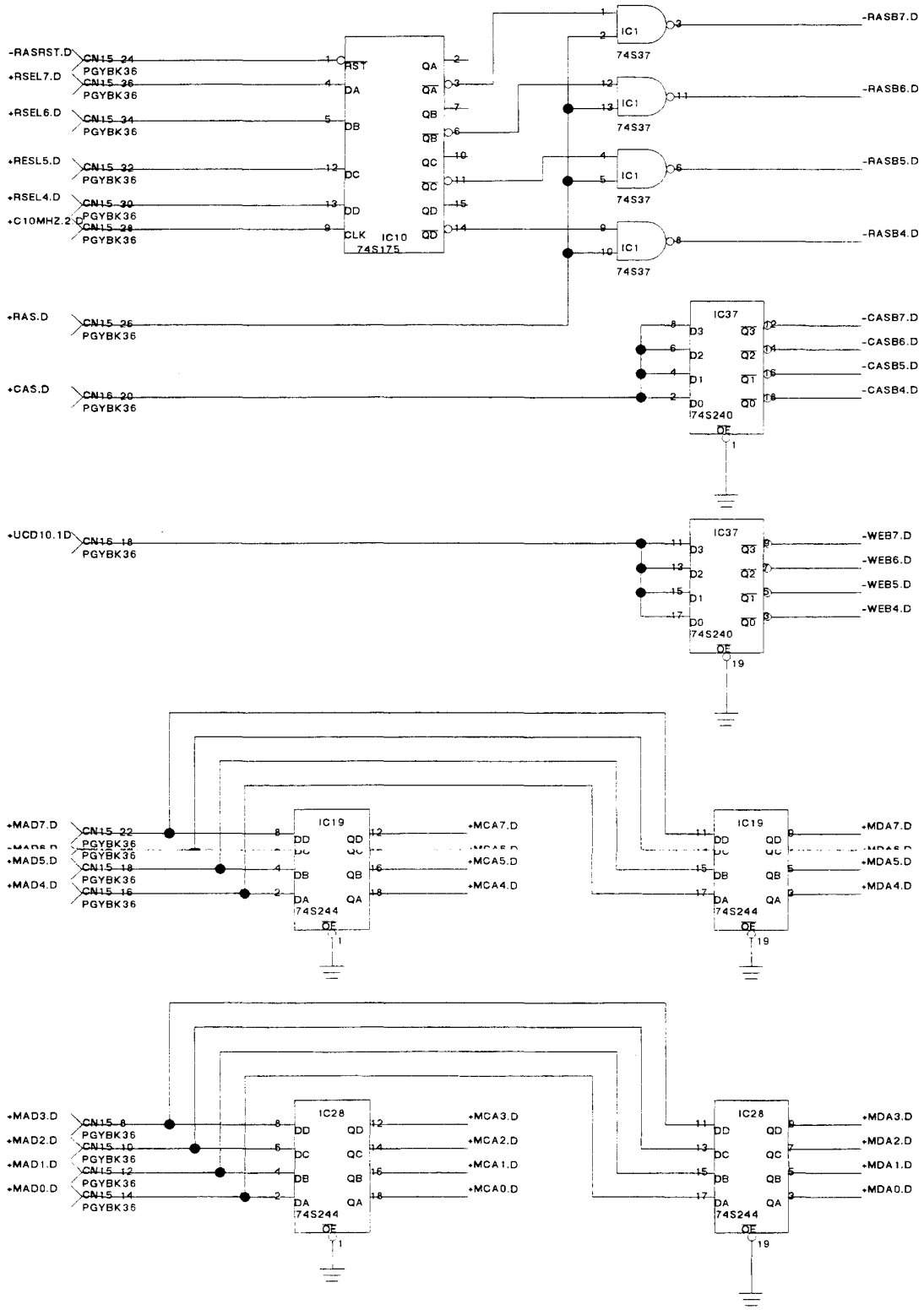

E-mu Systems, Inc. applied magic for the arts		
Emulator 2 Memory Option		
DRAWN BY: DPR	DOC NO. S-6151-001 PAGE 1 OF 6	
REV 0.A	DATE 850613	7 - 32

+MDIB7.D — CN16 15 PGYBK36 — +MDIB7.D

+MDIB6.D — CN16 14 PGYBK36 — +MDIB6.D

+MDIb5.D — CN16 12 PGYBK36 — +MDIb5.D

+MDIB4.D — CN16 10 PGYBK36 — +MDIB4.D

+MDIB3.D — CN16 8 PGYBK36 — +MDIB3.D

+MDIB2.D — CN16 6 PGYBK36 — +MDIB2.D

+MDIB1.D — CN16 4 PGYBK36 — +MDIB1.D

+MDIB0.D — CN16 2 PGYBK36 — +MDIB0.D

+MDOB7.D — CN16 22 PGYBK36 — +MDOB7.D

+MDOB6.D — CN16 24 PGYBK36 — +MDOB6.D

+MDOB5.D — CN16 26 PGYBK36 — +MDOB5.D

+MDOB4.D — CN16 28 PGYBK36 — +MDOB4.D

+MDOB3.D — CN16 30 PGYBK36 — +MDOB3.D

+MDOB2.D — CN16 32 PGYBK36 — +MDOB2.D

+MDOB1.D — CN16 34 PGYBK36 — +MDOB1.D

+MDOB0.D — CN16 36 PGYBK36 — +MDOB0.D

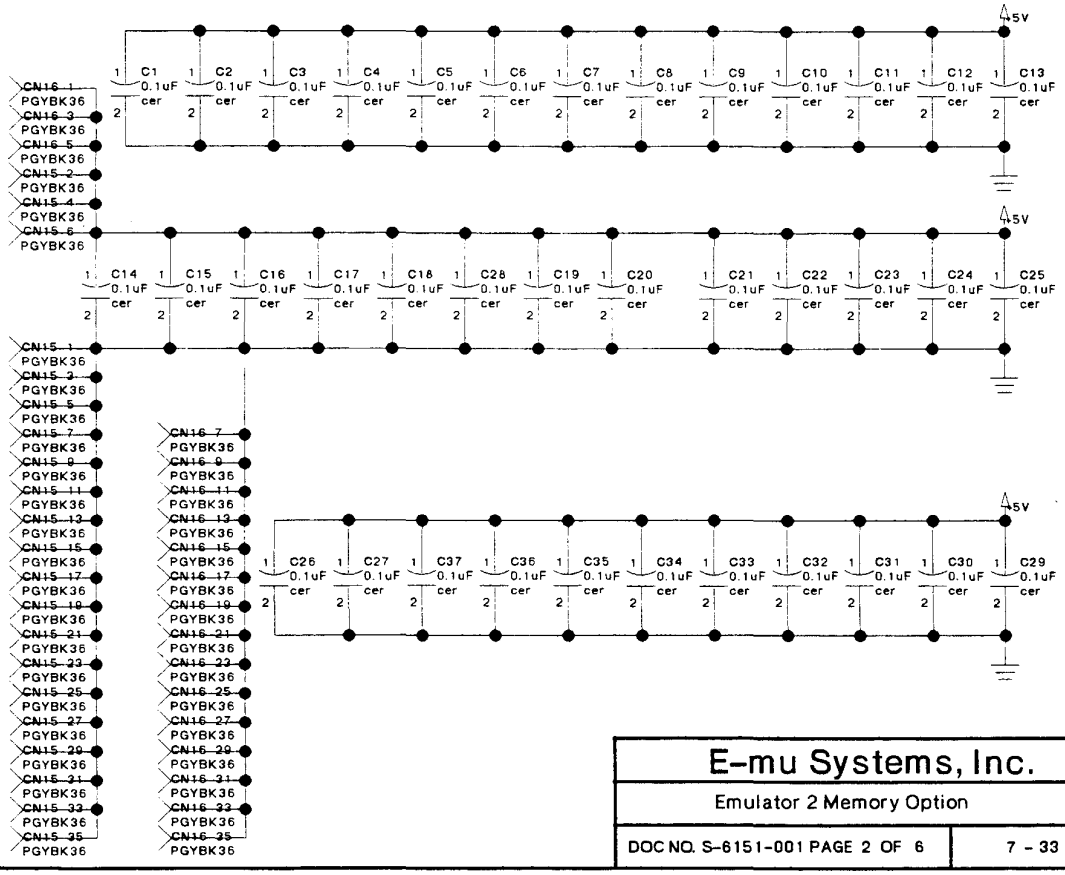

E-mu Systems, Inc.

Emulator 2 Memory Option

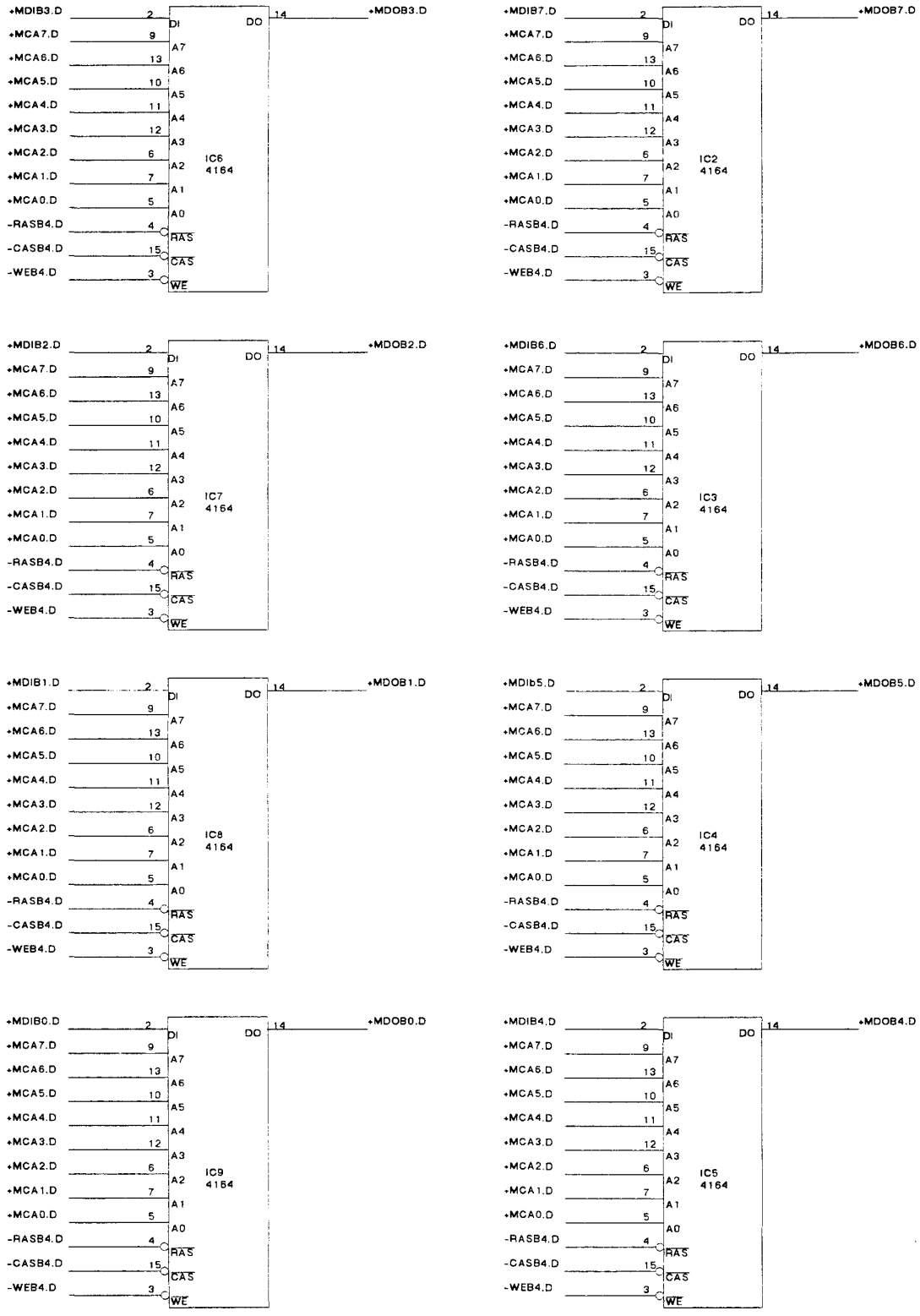
+MDIB3.D
+MCA7.D
+MCA6.D
+MCA5.D
+MCA4.D
+MCA3.D
+MCA2.D
+MCA1.D
+MCA0.D
-RASB4.D
-CASB4.D
-WEB4.D
DI
DO
A7
A6
A5
A4
A3
A2
A1
A0
RAS
CAS
WE
IC6
4164
+MDOB3.D
+MDIB7.D
IC2
+MDOB7.D
+MDIB2.D
IC7
+MDOB2.D
+MDIB6.D
IC3
+MDOB6.D
+MDIB1.D
IC8
+MDOB1.D
+MDIb5.D
IC4
+MDOB5.D
+MDIB0.D
IC9
+MDOB0.D
+MDIB4.D
IC5
+MDOB4.D

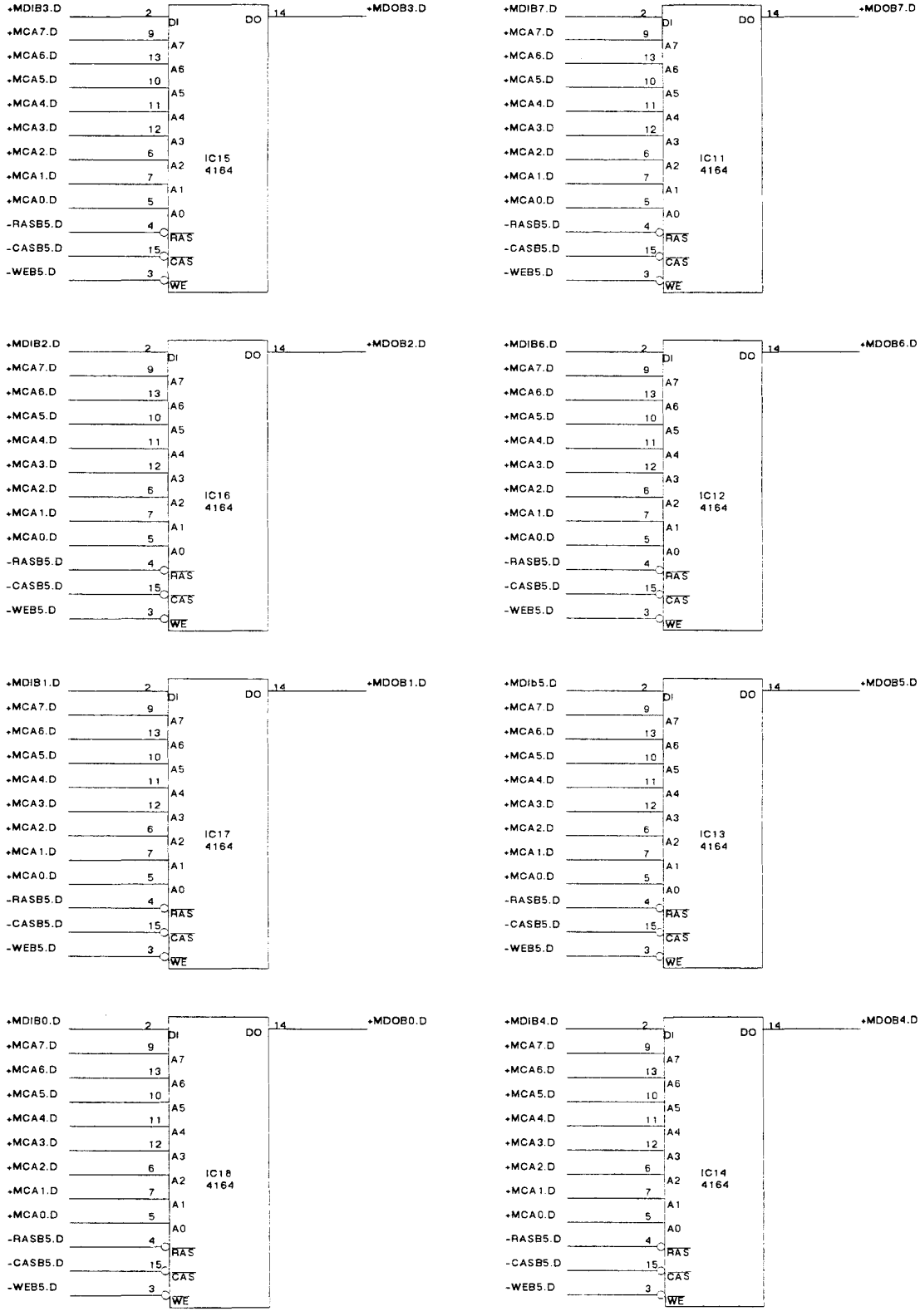

E-mu Systems, Inc.	
Emulator 2 Memory Option	
DOC NO. S-6151-001 PAGE 4 OF 6	7 - 35

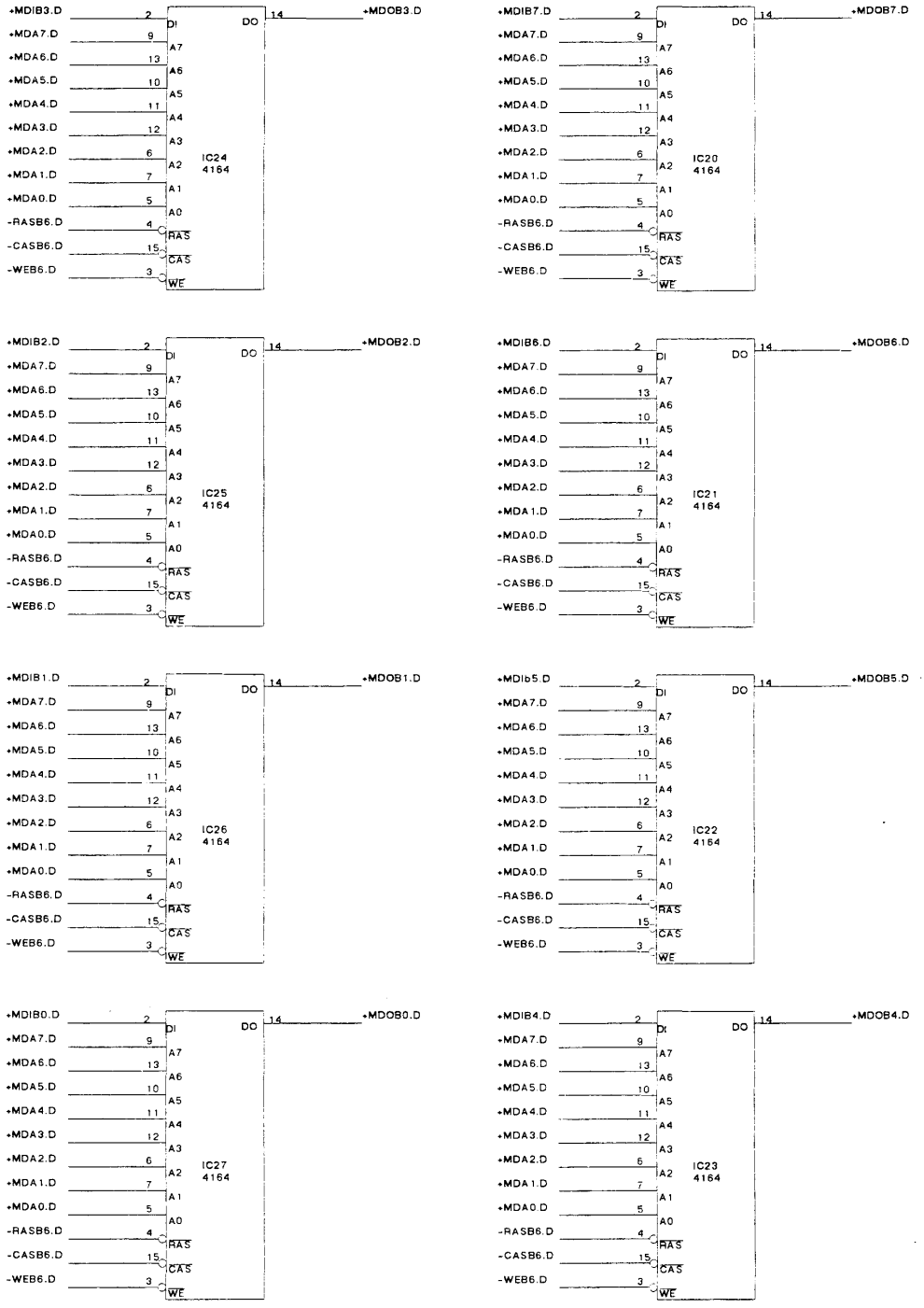

E-mu Systems, Inc.	
Emulator 2 Memory Option	
DOC NO. S-6151-001 PAGE 5 OF 6	7 - 36

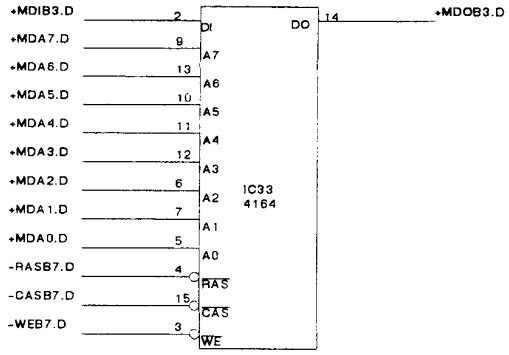
+MDIB3.D
+MDA7.D
+MDA6.D
+MDA5.D
+MDA4.D
+MDA3.D
+MDA2.D
+MDA1.D
+MDA0.D
-RASB7.D
-CASB7.D
-WEB7.D
DI
DO
A7
A6
A5
A4
A3
A2
A1
A0
RAS
CAS
WE
IC33
4164
+MDOB3.D

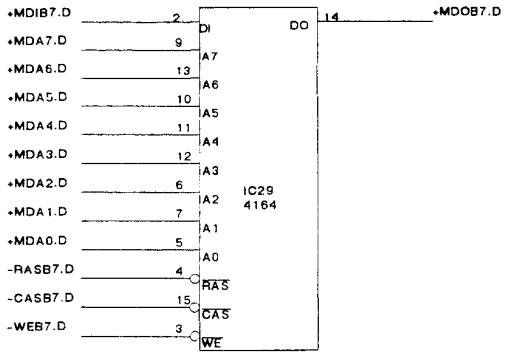
+MDIB7.D
+MDA7.D
+MDA6.D
+MDA5.D
+MDA4.D
+MDA3.D
+MDA2.D
+MDA1.D
+MDA0.D
-RASB7.D
-CASB7.D
-WEB7.D
DI
DO
A7
A6
A5
A4
A3
A2
A1
A0
RAS
CAS
WE
IC29
4164
+MDOB7.D

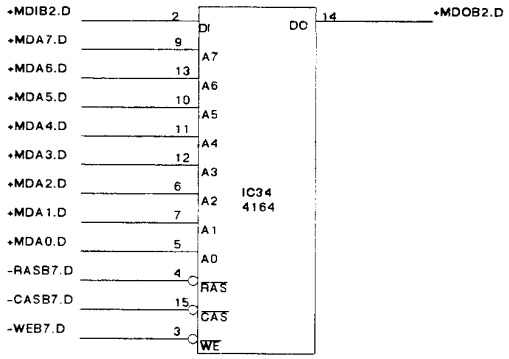
+MDIB2.D
+MDA7.D
+MDA6.D
+MDA5.D
+MDA4.D
+MDA3.D
+MDA2.D
+MDA1.D
+MDA0.D
-RASB7.D
-CASB7.D
-WEB7.D
DI
DO
A7
A6
A5
A4
A3
A2
A1
A0
RAS
CAS
WE
IC34
4164
+MDOB2.D

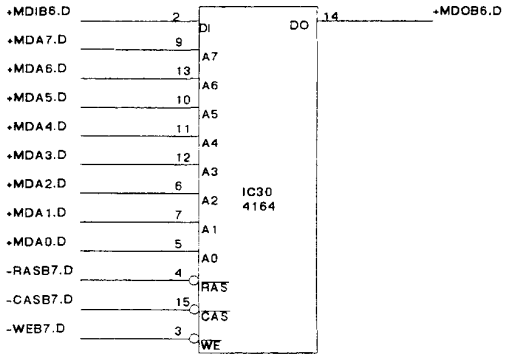
+MDIB6.D
+MDA7.D
+MDA6.D
+MDA5.D
+MDA4.D
+MDA3.D
+MDA2.D
+MDA1.D
+MDA0.D
-RASB7.D
-CASB7.D
-WEB7.D
DI
DO
A7
A6
A5
A4
A3
A2
A1
A0
RAS
CAS
WE
IC30
4164
+MDOB6.D

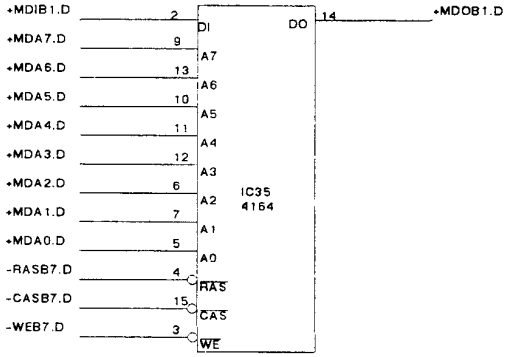
+MDIB1.D
+MDA7.D
+MDA6.D
+MDA5.D
+MDA4.D
+MDA3.D
+MDA2.D
+MDA1.D
+MDA0.D
-RASB7.D
-CASB7.D
-WEB7.D
DI
DO
A7
A6
A5
A4
A3
A2
A1
A0
RAS
CAS
WE
IC35
4164
+MDOB1.D

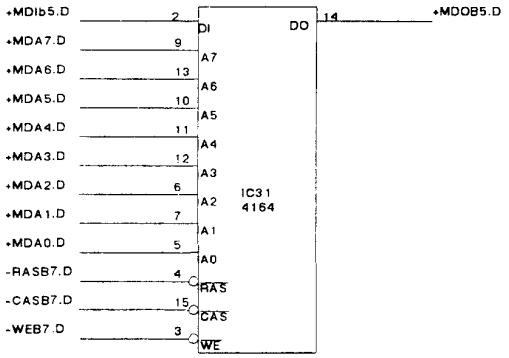
+MDIb5.D
+MDA7.D
+MDA6.D
+MDA5.D
+MDA4.D
+MDA3.D
+MDA2.D
+MDA1.D
+MDA0.D
-RASB7.D
-CASB7.D
-WEB7.D
DI
DO
A7
A6
A5
A4
A3
A2
A1
A0
RAS
CAS
WE
IC31
4164
+MDOB5.D

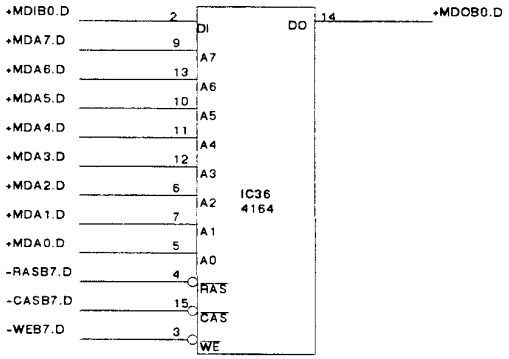
+MDIB0.D
+MDA7.D
+MDA6.D
+MDA5.D
+MDA4.D
+MDA3.D
+MDA2.D
+MDA1.D
+MDA0.D
-RASB7.D
-CASB7.D
-WEB7.D
DI
DO
A7
A6
A5
A4
A3
A2
A1
A0
RAS
CAS
WE
IC36
4164
+MDOB0.D

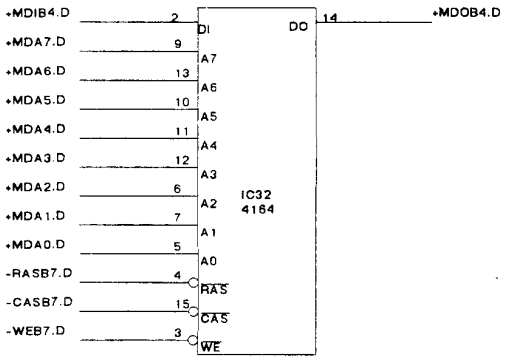
+MDIB4.D
+MDA7.D
+MDA6.D
+MDA5.D
+MDA4.D
+MDA3.D
+MDA2.D
+MDA1.D
+MDA0.D
-RASB7.D
-CASB7.D
-WEB7.D
DI
DO
A7
A6
A5
A4
A3
A2
A1
A0
RAS
CAS
WE
IC32
4164
+MDOB4.D

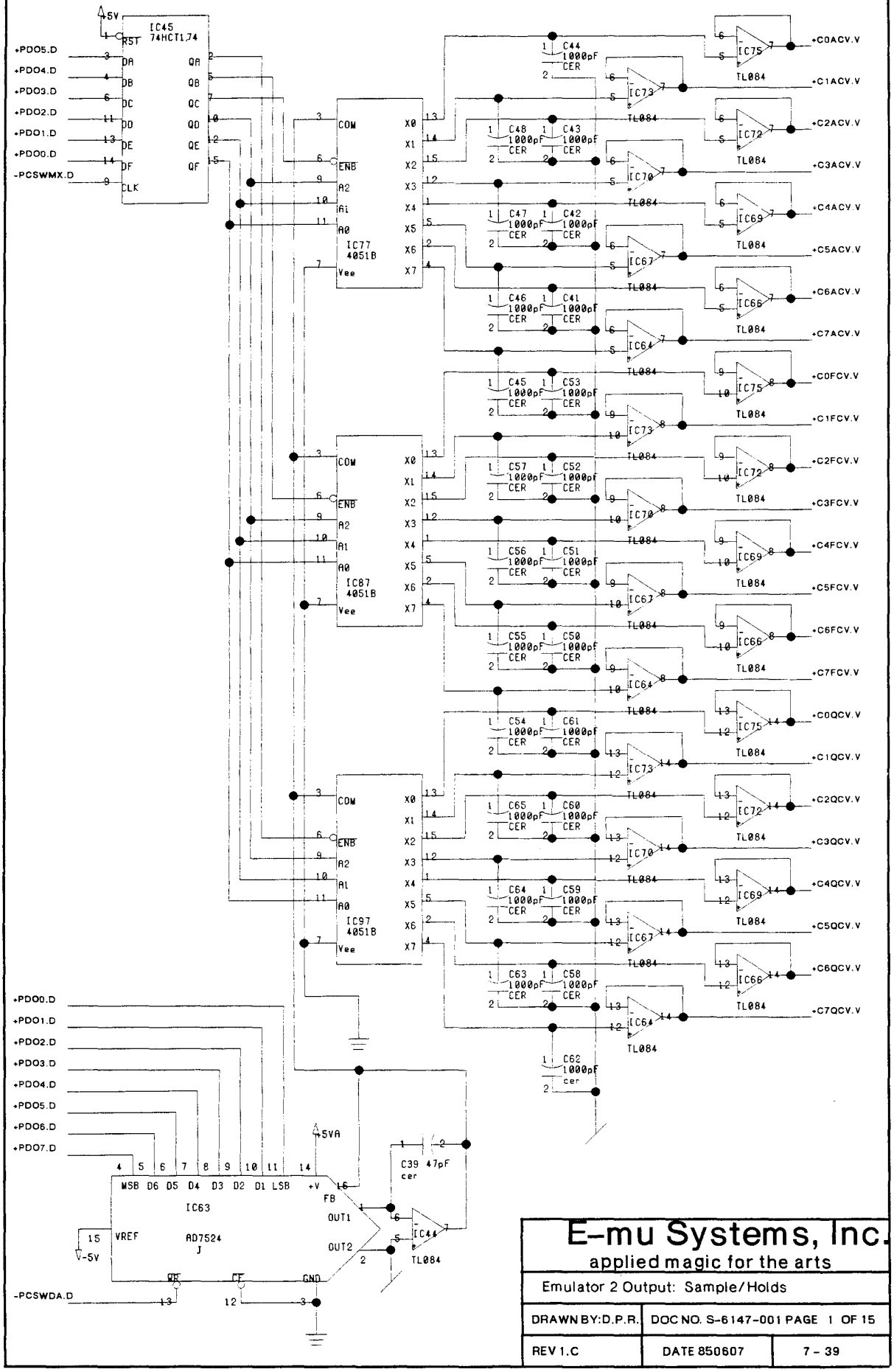

E-mu Systems, Inc.

applied magic for the arts

Emulator 2 Output: Sample/Holds

DRAWN BY: D.P.R.	DOC NO. S-6147-001 PAGE 1 OF 15	
REV 1.C	DATE 850607	7 - 39

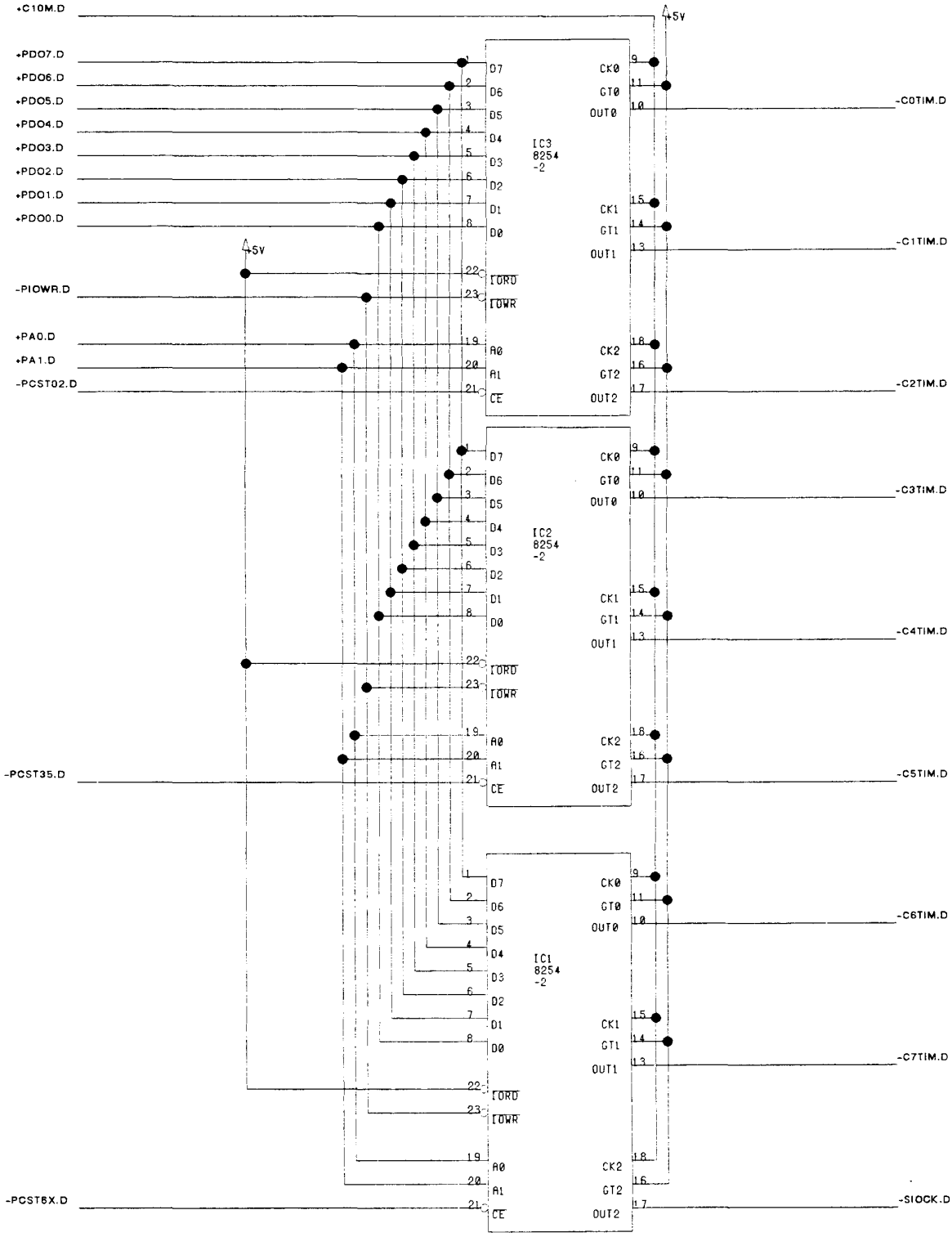

E-mu Systems, Inc.	
Emulator 2 Output: Timers	
DOC NO. S-6147-001 PAGE 2 OF 15	7 - 40

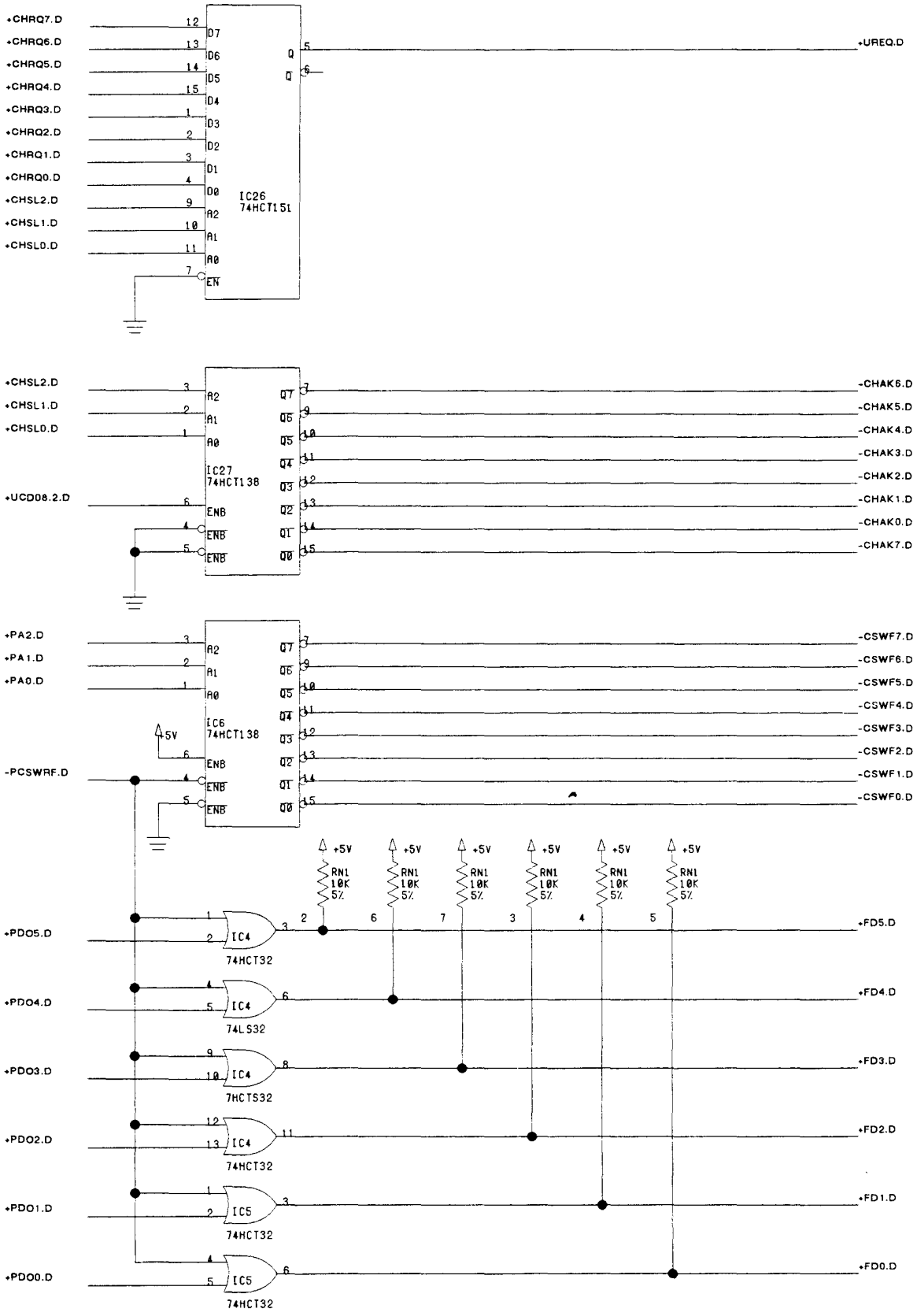

E-mu Systems, Inc.	
Emualtor 2 Output: RQ/AK, Filter Sel	
DOC NO. S-6147-001 PAGE 3 OF 15	7 - 41

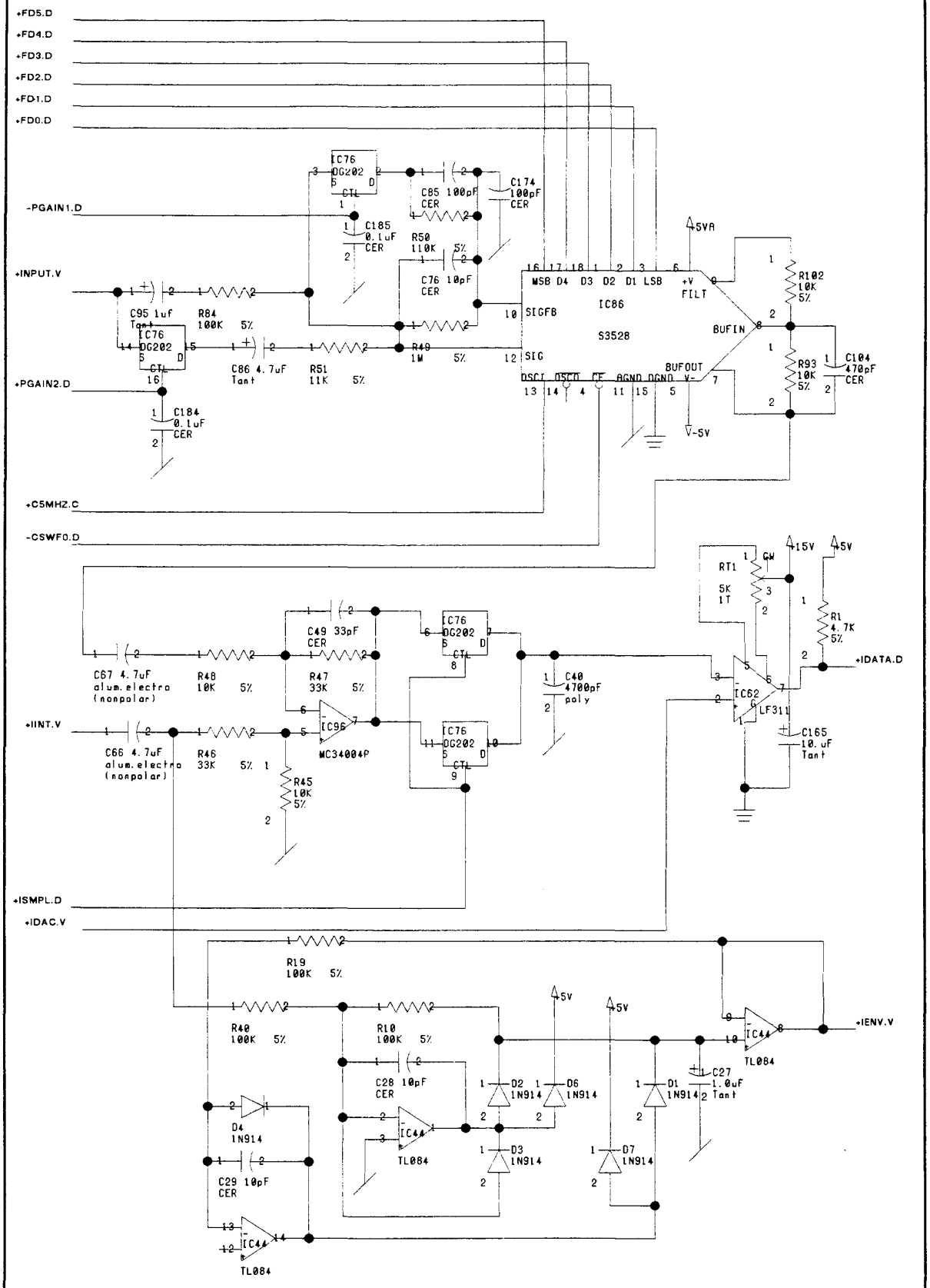

E-mu Systems, Inc.

Emulator 2 Output: Input Analog

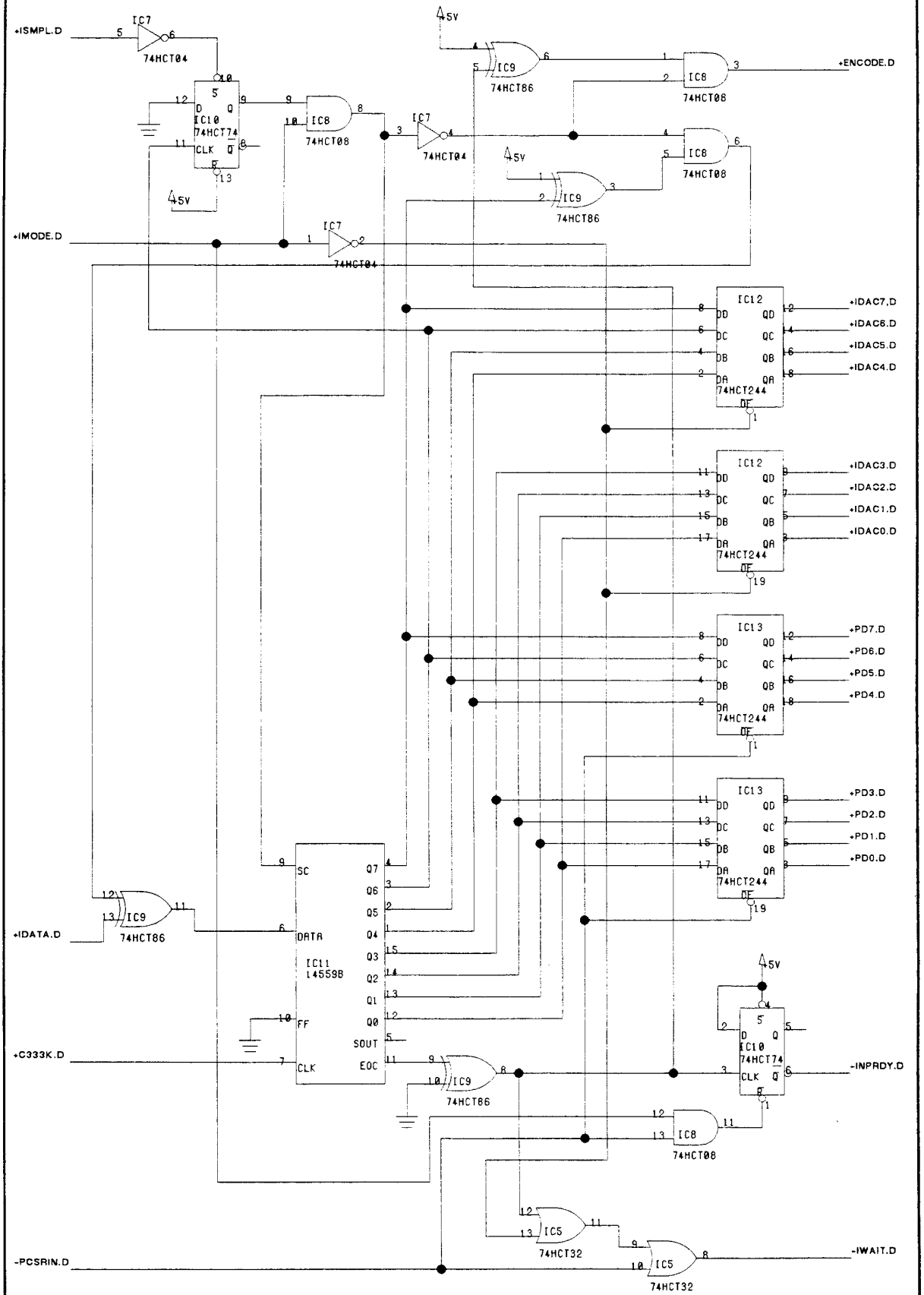

E-mu Systems, Inc.	
Emulator 2 Output: SAR and logic	
DOC NO. S-6147-001 PAGE 5 OF 15	7 - 43

NOTE: C186--C193 DO NOT APPEAR ON REV 1 SILKSCREEN

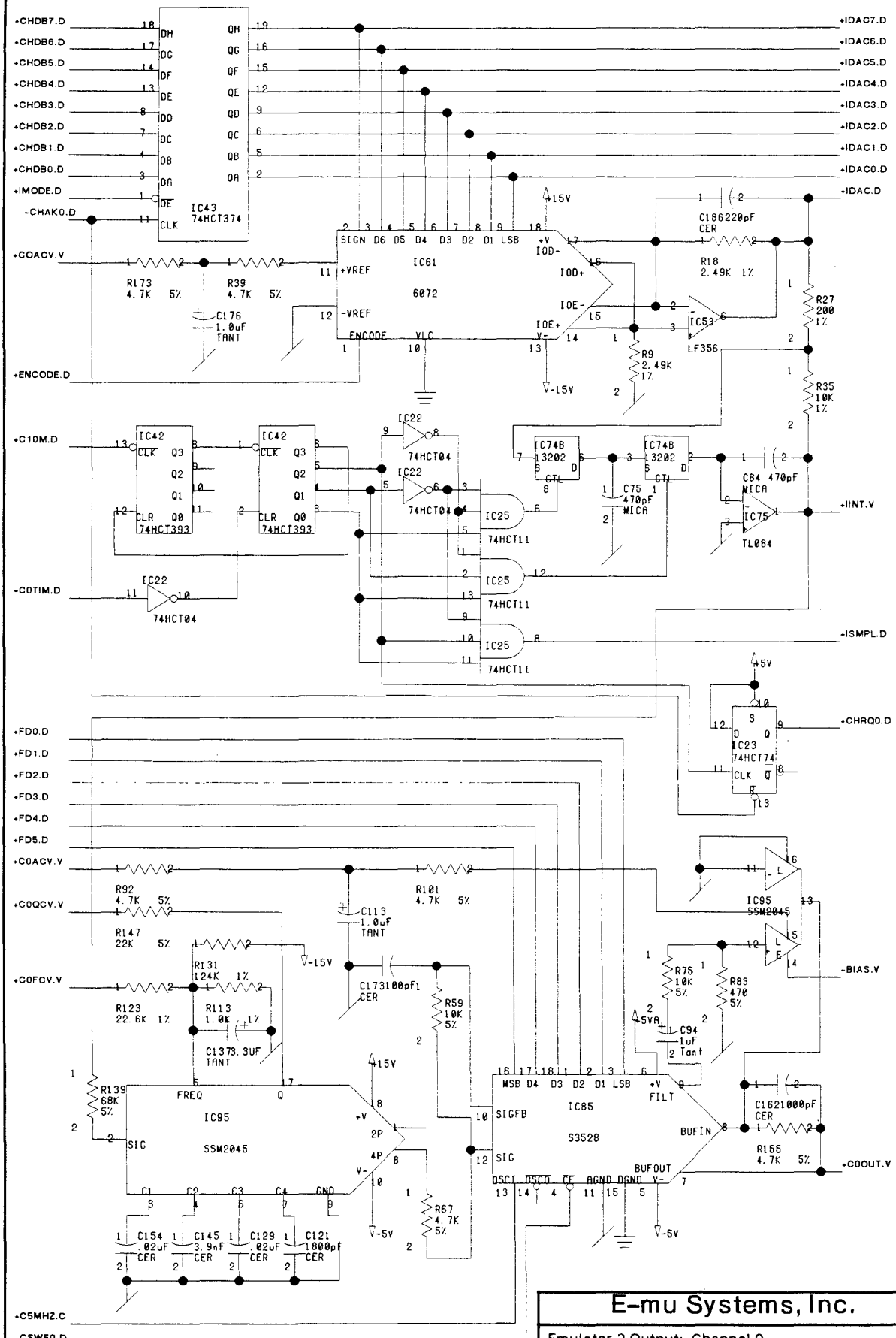

E-mu Systems, Inc.	
Emulator 2 Output: Channel 0	
DOC NO. S-6147-001 PAGE 6 OF 15	7 - 44

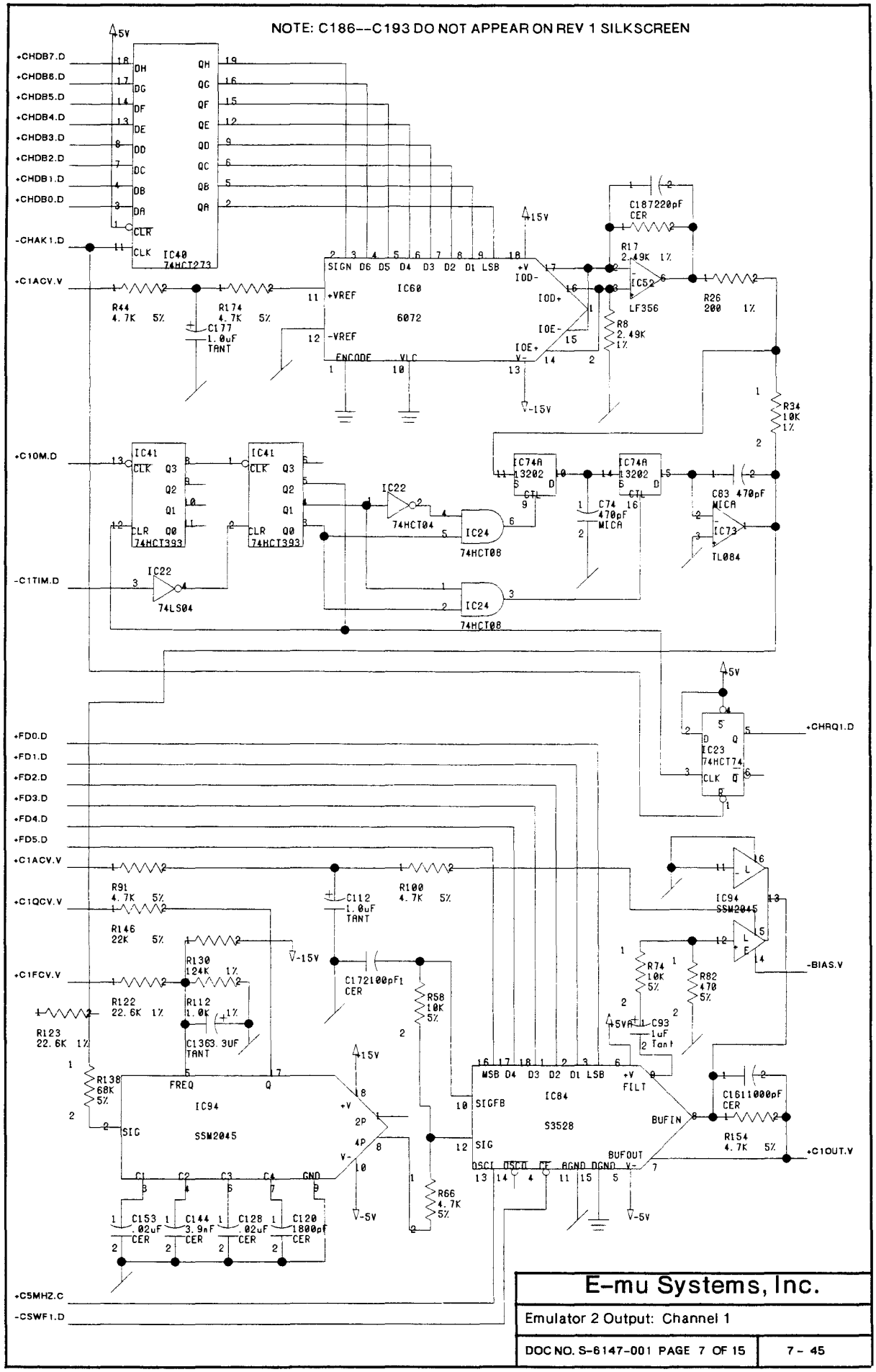
NOTE: C186--C193 DO NOT APPEAR ON REV 1 SILKSCREEN
+CHDB7.D
+CHDB6.D
+CHDB5.D
+CHDB4.D
+CHDB3.D
+CHDB2.D
+CHDB1.D
+CHDB0.D
-CHAK1.D
+C1ACV.V
+C10M.D
-C1TIM.D
+FD0.D
+FD1.D
+FD2.D
+FD3.D
+FD4.D
+FD5.D
+C1QCV.V
+C1FCV.V
+C5MHZ.C
-CSWF1.D
+CHRQ1.D
-BIAS.V
+C1OUT.V
IC40 74HCT273
IC60 6072
IC41 74HCT393
IC22 74HCT04
IC24 74HCT08
74LS04
IC74A 13202
IC52 LF356
IC73 TL084
IC23 74HCT74
IC94 SSM2045
IC84 S3528
R44 4.7K 5%
R174 4.7K 5%
C177 1.0uF TANT
R17 2.49K 1%
C187220pF CER
R26 200 1%
R8 2.49K 1%
R34 10K 1%
C74 470pF MICA
C83 470pF MICA
R91 4.7K 5%
R146 22K 5%
R130 124K 1%
R122 22.6K 1%
R112 1.0K 1%
R123 22.6K 1%
C1363.3UF TANT
C112 1.0uF TANT
R100 4.7K 5%
C172100pF CER
R58 10K 5%
R66 4.7K 5%
R138 68K 5%
C153 .02uF CER
C144 3.9nF CER
C128 .02uF CER
C120 1800pF CER
R74 10K 5%
R82 470 5%
C93 1uF Tant
C1611000pF CER
R154 4.7K 5%
+15V
-15V
+5V
-5V
E-mu Systems, Inc.
Emulator 2 Output: Channel 1
DOC NO. S-6147-001 PAGE 7 OF 15
7 - 45

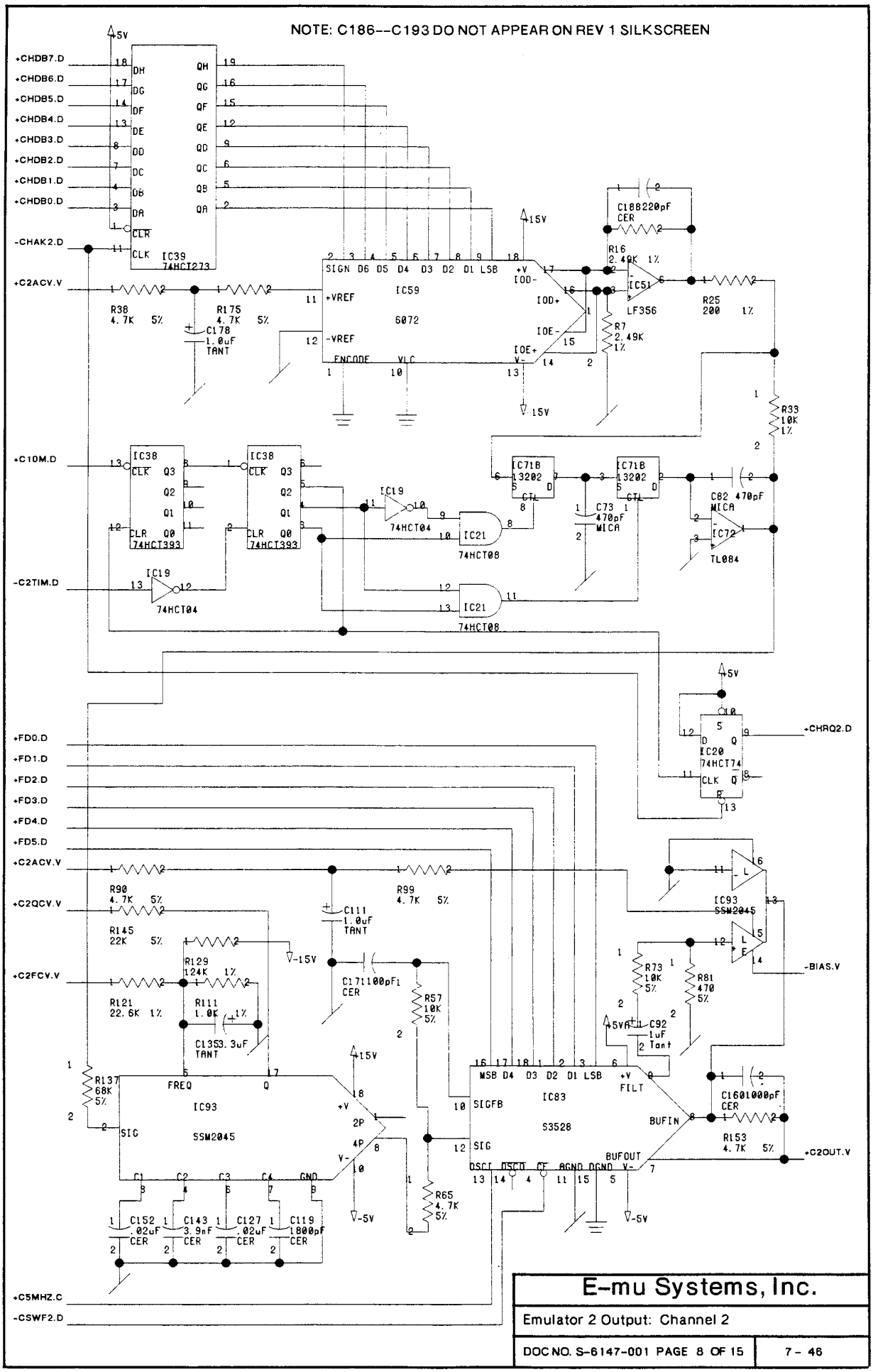

E-mu Systems, Inc.

Emulator 2 Output: Channel 2

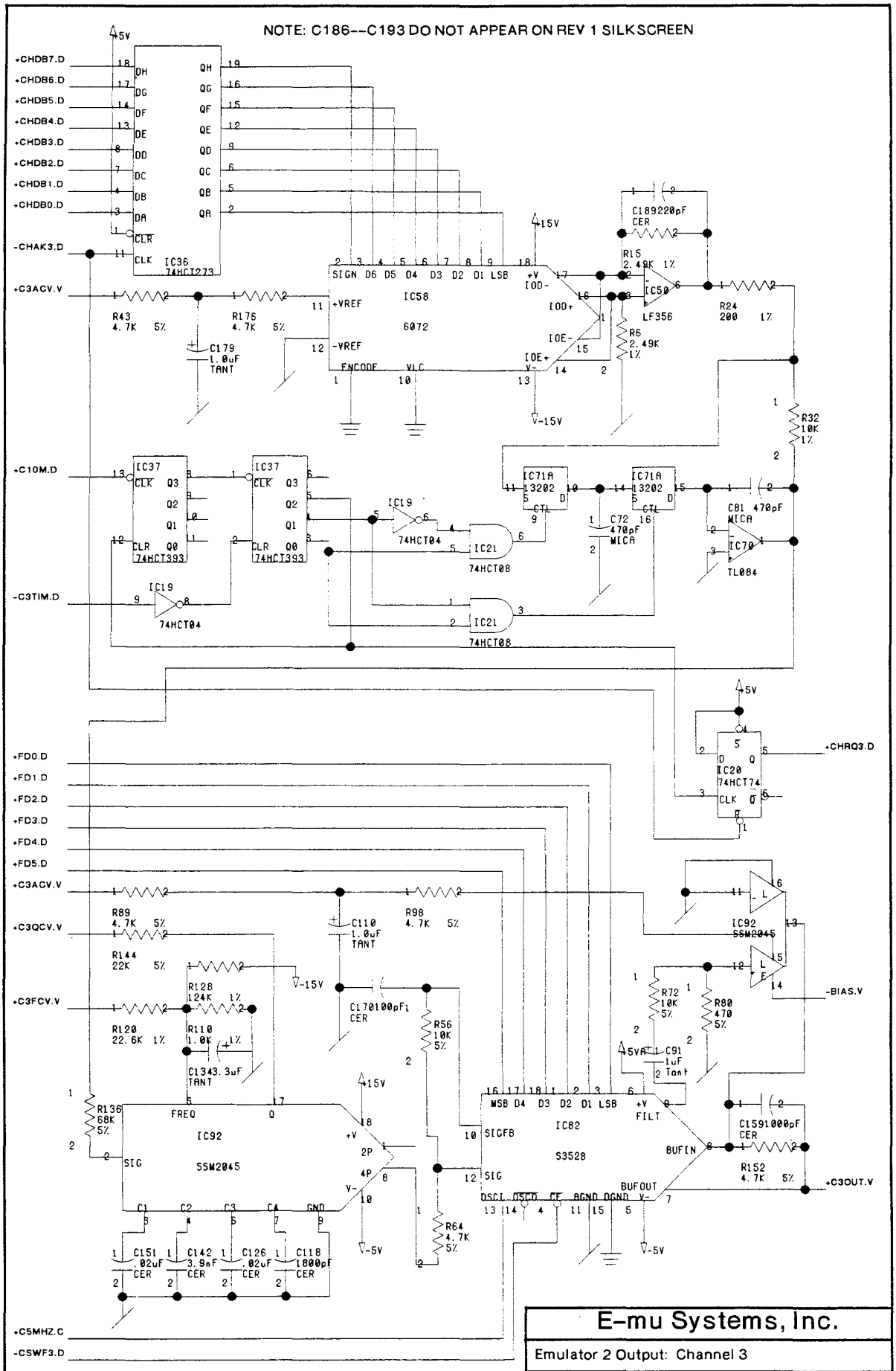
NOTE: C186--C193 DO NOT APPEAR ON REV 1 SILKSCREEN
+CHDB7.D
+CHDB6.D
+CHDB5.D
+CHDB4.D
+CHDB3.D
+CHDB2.D
+CHDB1.D
+CHDB0.D
-CHAK3.D
+C3ACV.V
+C10M.D
-C3TIM.D
+FD0.D
+FD1.D
+FD2.D
+FD3.D
+FD4.D
+FD5.D
+C3QCV.V
+C3FCV.V
+C5MHZ.C
-CSWF3.D
+CHRQ3.D
-BIAS.V
+C3OUT.V
IC36 74HCT273
IC58 6072
IC50 LF356
IC37 74HCT393
IC19 74HCT04
IC21 74HCT08
IC71A 13202
IC70 TL084
IC20 74HCT74
IC92 SSM2045
IC82 S3528
R43 4.7K 5%
R176 4.7K 5%
R24 200 1%
R6 2.49K 1%
R32 10K 1%
R89 4.7K 5%
R98 4.7K 5%
R144 22K 5%
R128 124K 1%
R120 22.6K 1%
R110 1.0K 1%
R136 68K 5%
R56 10K 5%
R64 4.7K 5%
R72 10K 5%
R80 470 5%
R152 4.7K 5%
C179 1.0uF TANT
C110 1.0uF TANT
C134 3.3uF TANT
C91 1uF Tant
C81 470pF MICA
C72 470pF MICA
C189 220pF CER
C159 1000pF CER
C151 .02uF CER
C142 3.9nF CER
C126 .02uF CER
C118 1800pF CER
+15V
-15V
+5V
-5V
E-mu Systems, Inc.
Emulator 2 Output: Channel 3
DOC NO. S-6147-001 PAGE 9 OF 15
7 - 47

NOTE: C186--C193 DO NOT APPEAR ON REV 1 SILKSCREEN

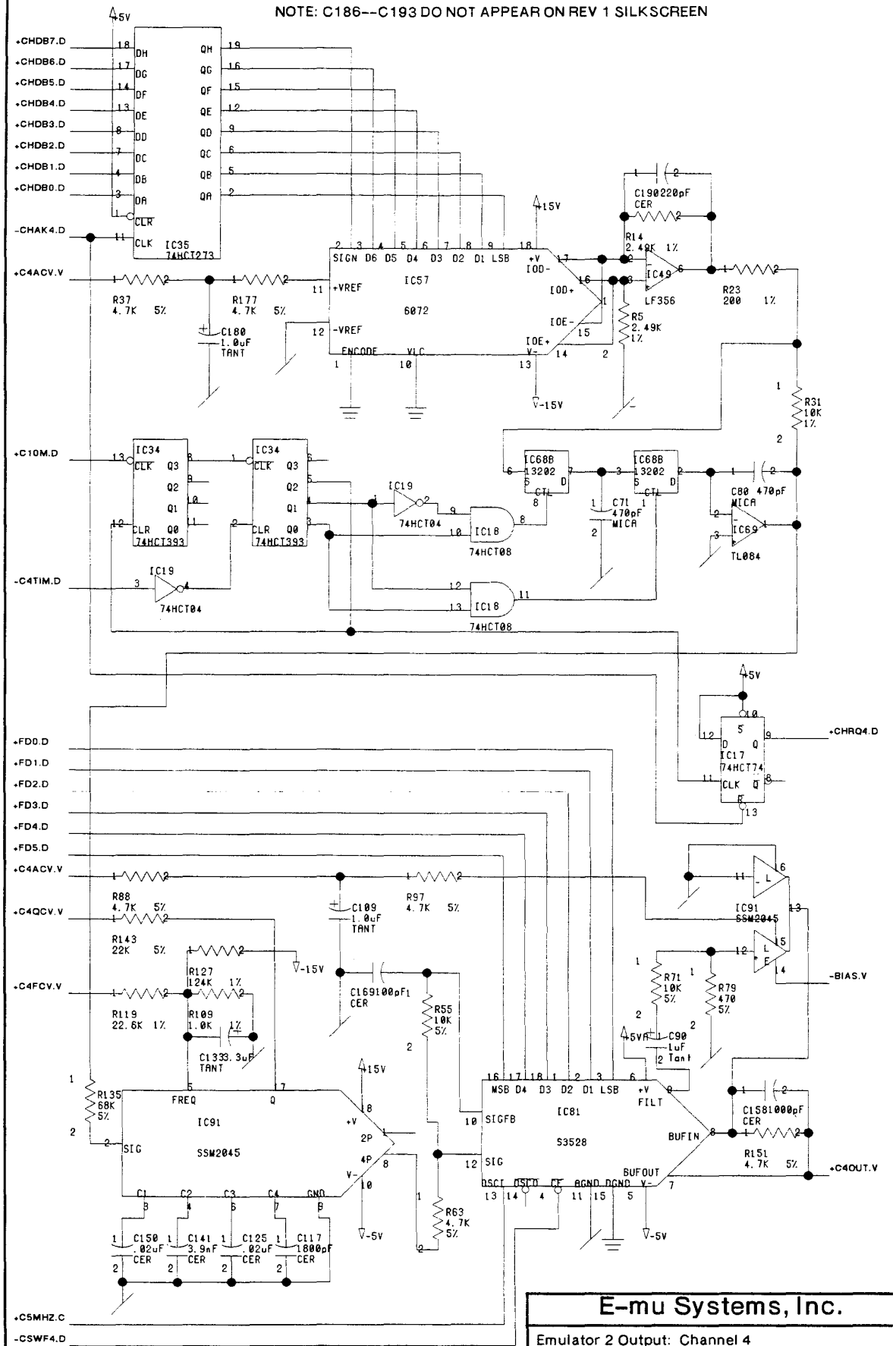

E-mu Systems, Inc.

Emulator 2 Output: Channel 4

NOTE: C186--C193 DO NOT APPEAR ON REV 1 SILKSCREEN

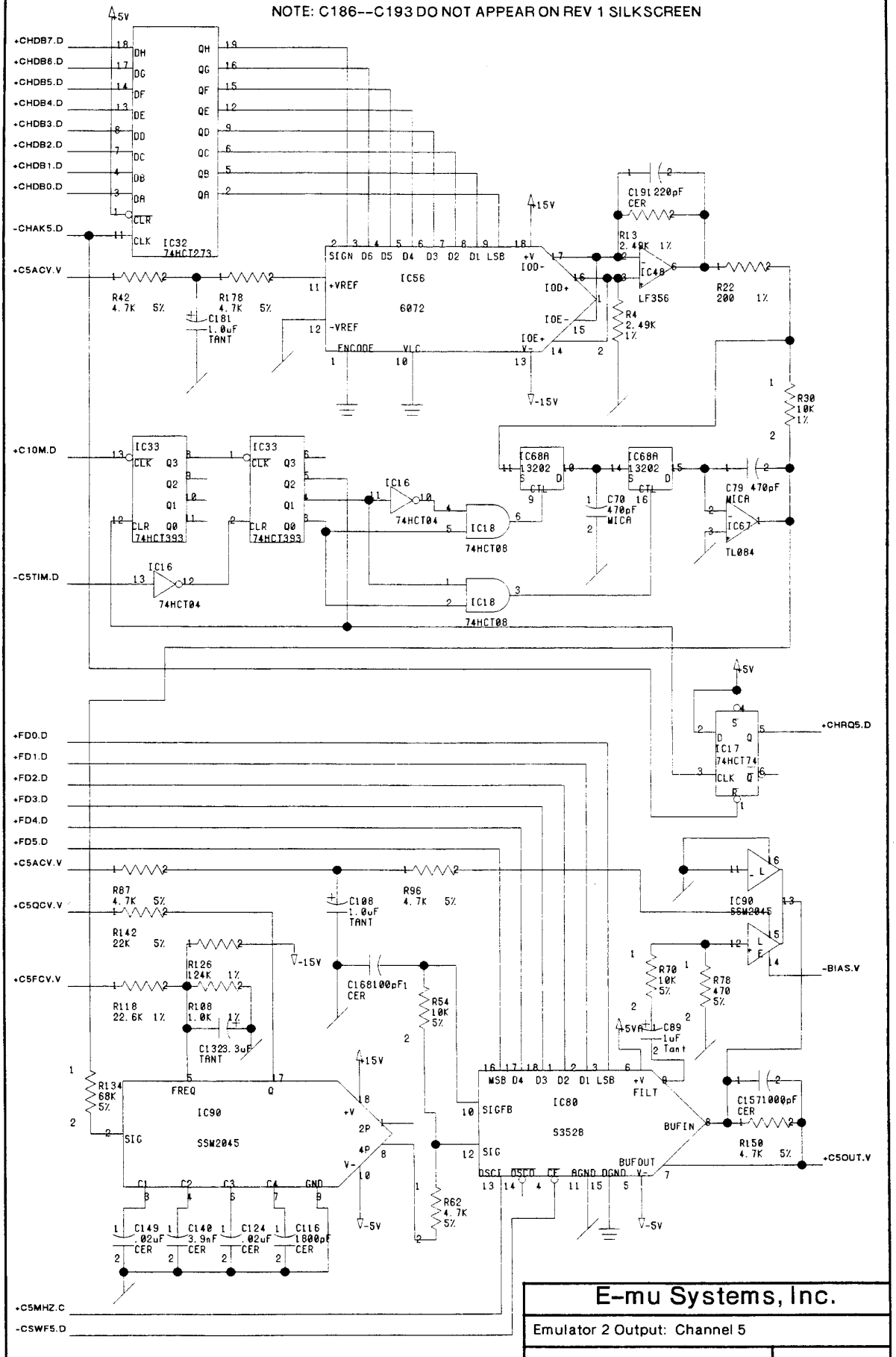

E-mu Systems, Inc.	
Emulator 2 Output: Channel 5	
DOC NO. S-6147-001 PAGE 11 OF 15	7 - 49

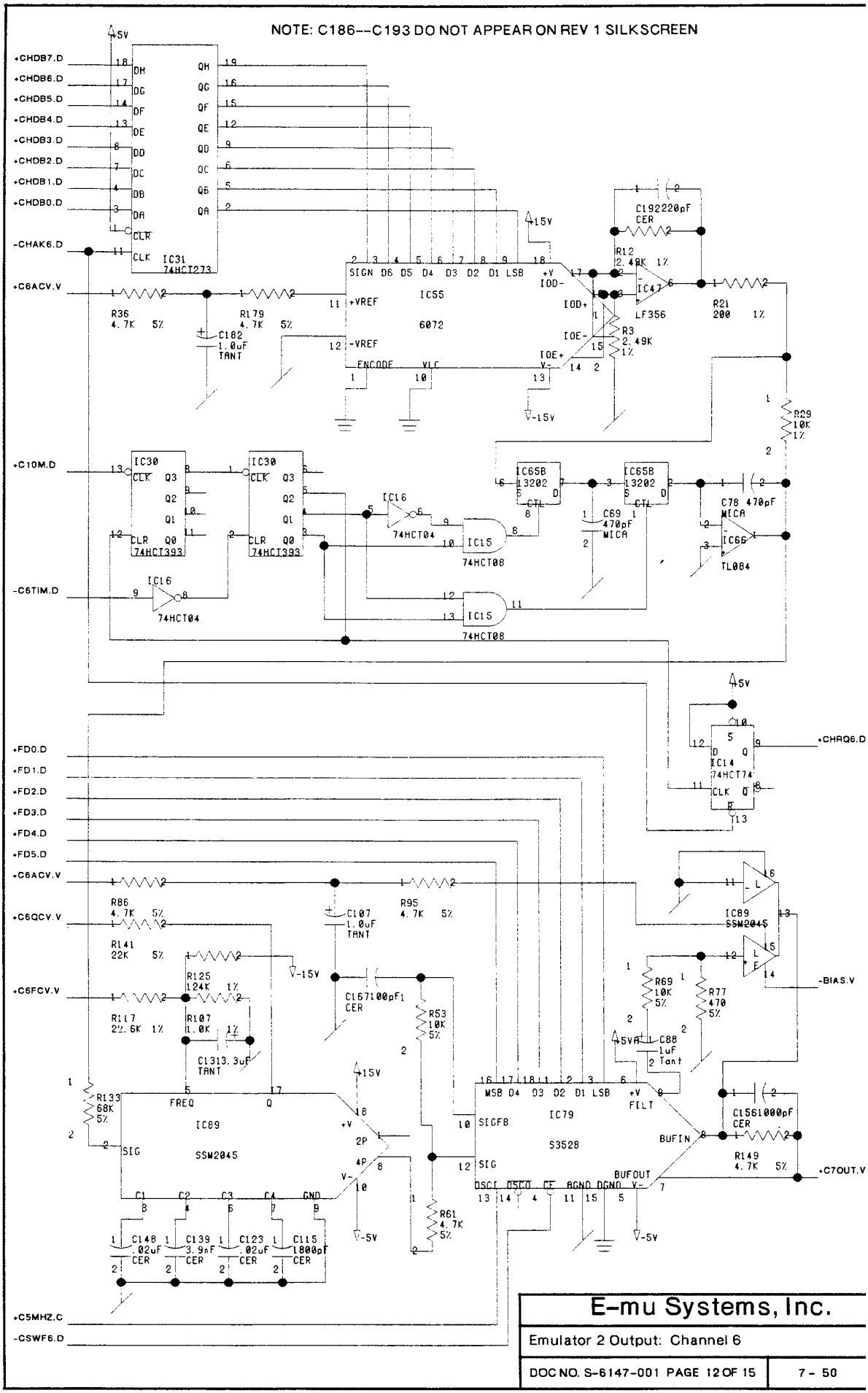

E-mu Systems, Inc.	
Emulator 2 Output: Channel 6	
DOC NO. S-6147-001 PAGE 12 OF 15	7 - 50

NOTE: C186--C193 DO NOT APPEAR ON REV 1 SILKSCREEN

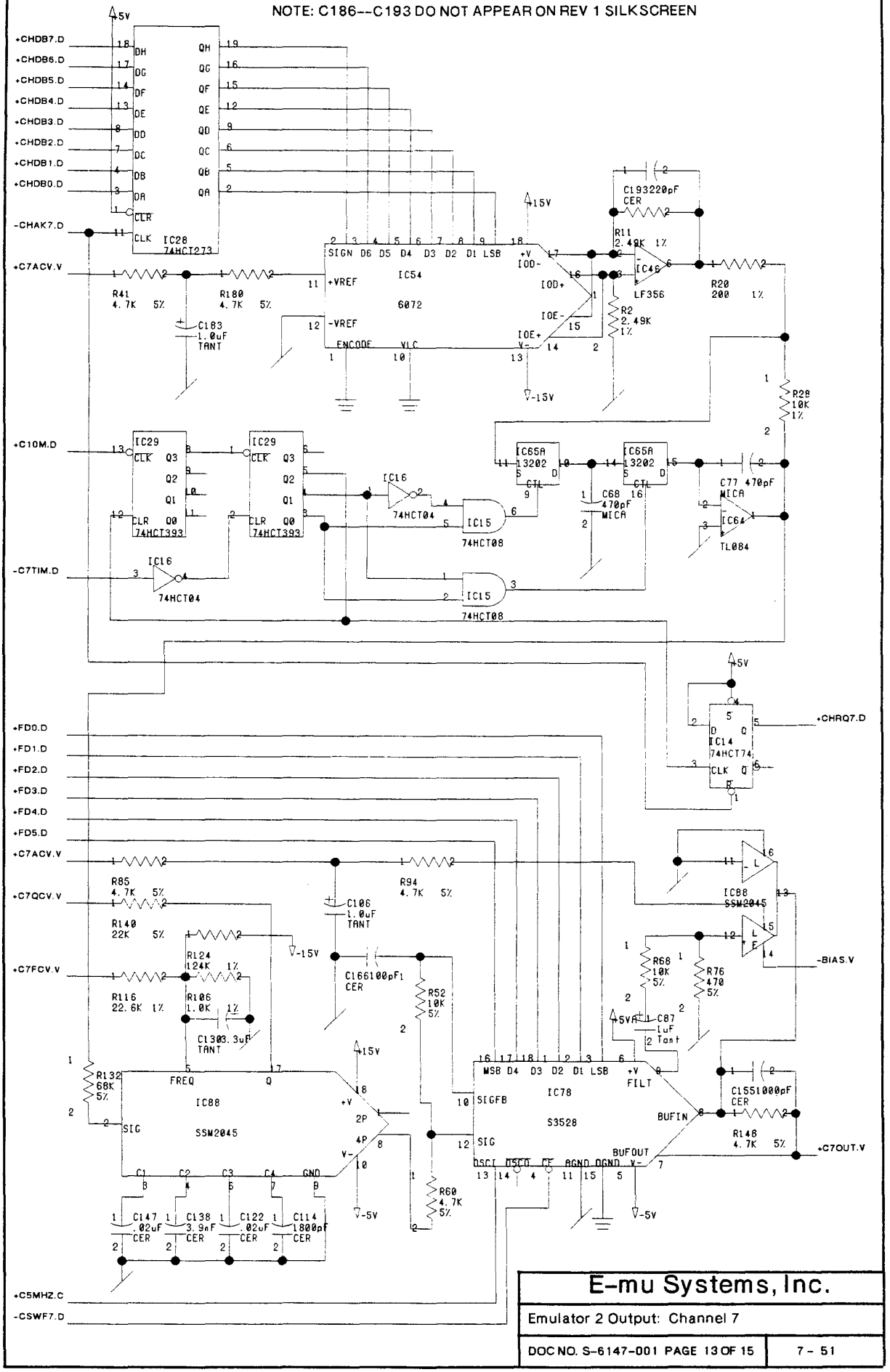

E-mu Systems, Inc.	
Emulator 2 Output: Channel 7	
DOC NO. S-6147-001 PAGE 13 OF 15	7 - 51

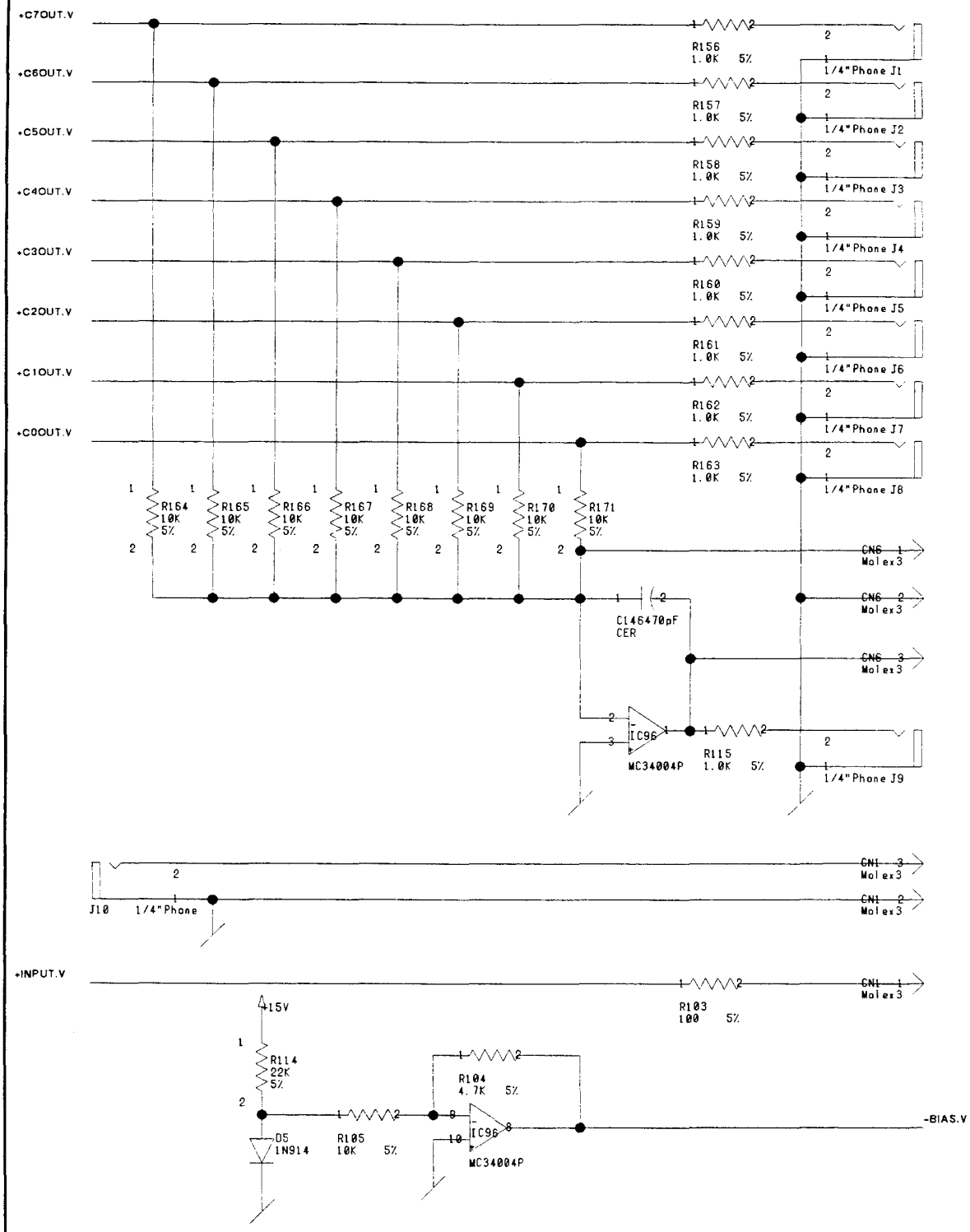

E-mu Systems, Inc.	
Emulator 2 Output: Mixer, Common	
DOC NO. S-6147-001 PAGE 14 OF 15	7 - 52

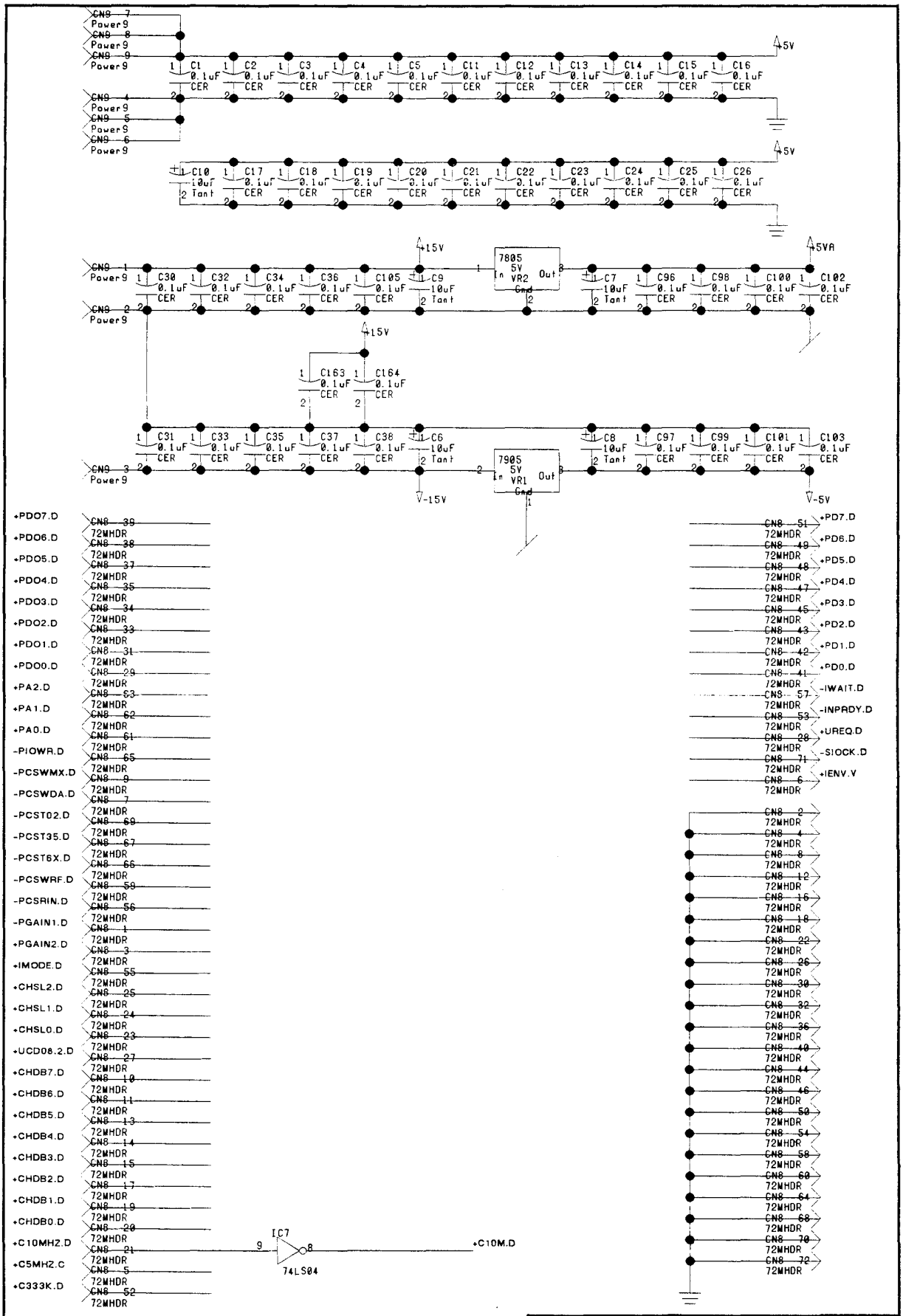

E-mu Systems, Inc.	
Emulator 2 Output: Connectors & Power	
DOC NO. S-6147-001 PAGE 15 OF 15	7 - 53

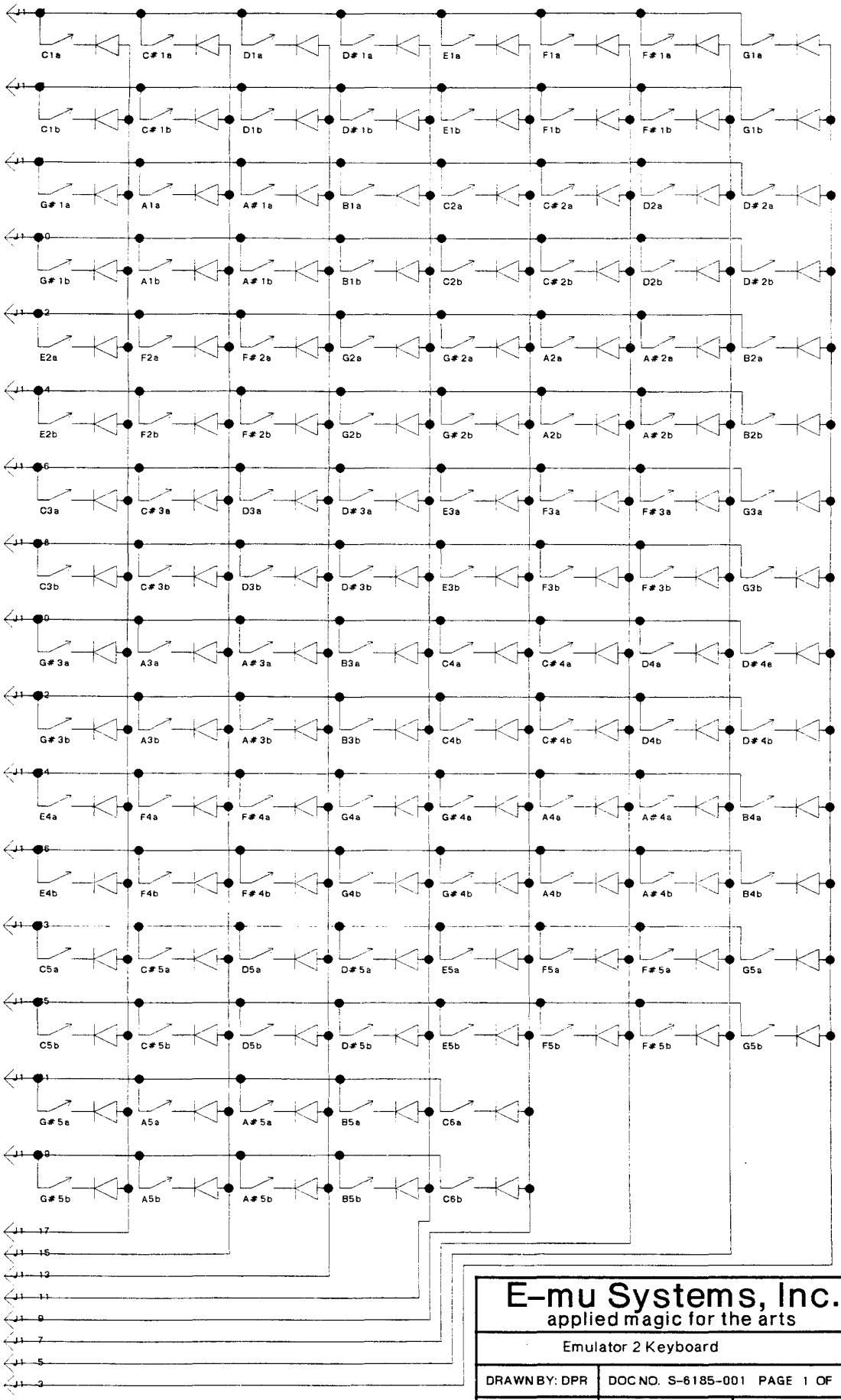

E-mu Systems, Inc.

applied magic for the arts

Emulator 2 Keyboard

DRAWN BY: DPR	DOC NO. S-6185-001 PAGE 1 OF 1	
REV 1.A	DATE 850617	7 - 54

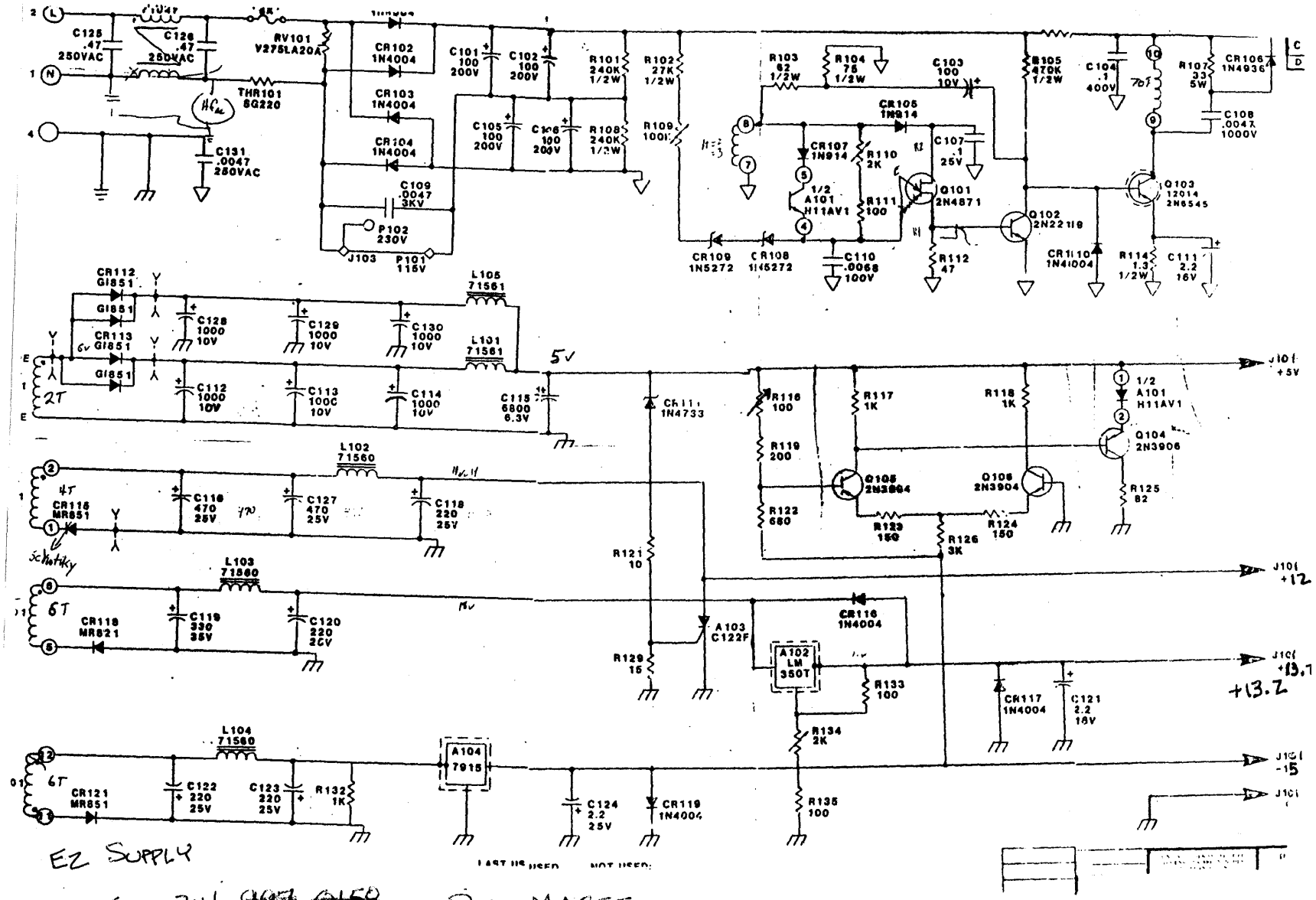

EZ SUPPLY

EVA 314 997 0158 PAUL MAGEE