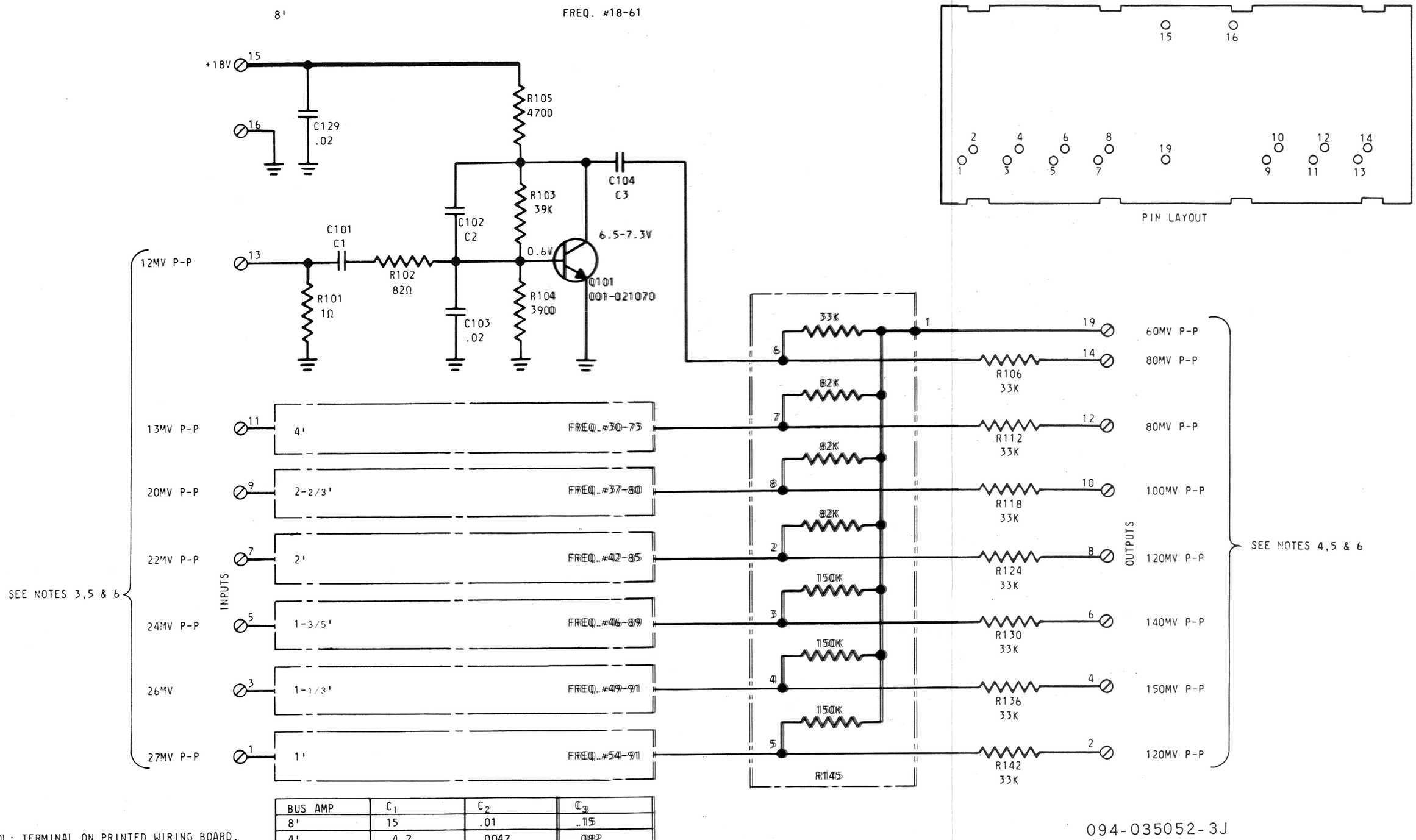

BUS AMP	C_1	C_2	C_3
8'	15	.01	.15
4'	4.7	.0047	.082
2-2/3'	3.3	.0027	.047
2'	2.2	.0027	.082
1-3/5'	2.2	.0022	.033
1-1/3'	1.5	.0022	.033
1'	1.0	.0012	.033

NOTES:

1. ⊘ SYMBOL: TERMINAL ON PRINTED WIRING BOARD.
2. UNLESS OTHERWISE SPECIFIED:
   ALL RESISTORS ARE IN OHMS, ±10%, 1/2 WATT;
   ALL CAPACITORS ARE IN MICROFARADS.
3. P-P VOLTAGE MEASUREMENTS TO BE MADE AT LEAD TERMINAL REMOVED FROM PIN.
4. P-P VOLTAGE MEASUREMENT TO BE MADE AT PINS WITH LEADS REMOVED.
5. WAVEFORMS ARE SINUSOIDAL.
6. MEASUREMENTS MADE WITH KEY NO. 25 ON LOWER MANUAL DEPRESSED.

FIGURE 5–4.
LAYOUT AND SCHEMATIC DIAGRAM,
LOWER MANUAL BUS AMPLIFIER BOARD,
124-000016

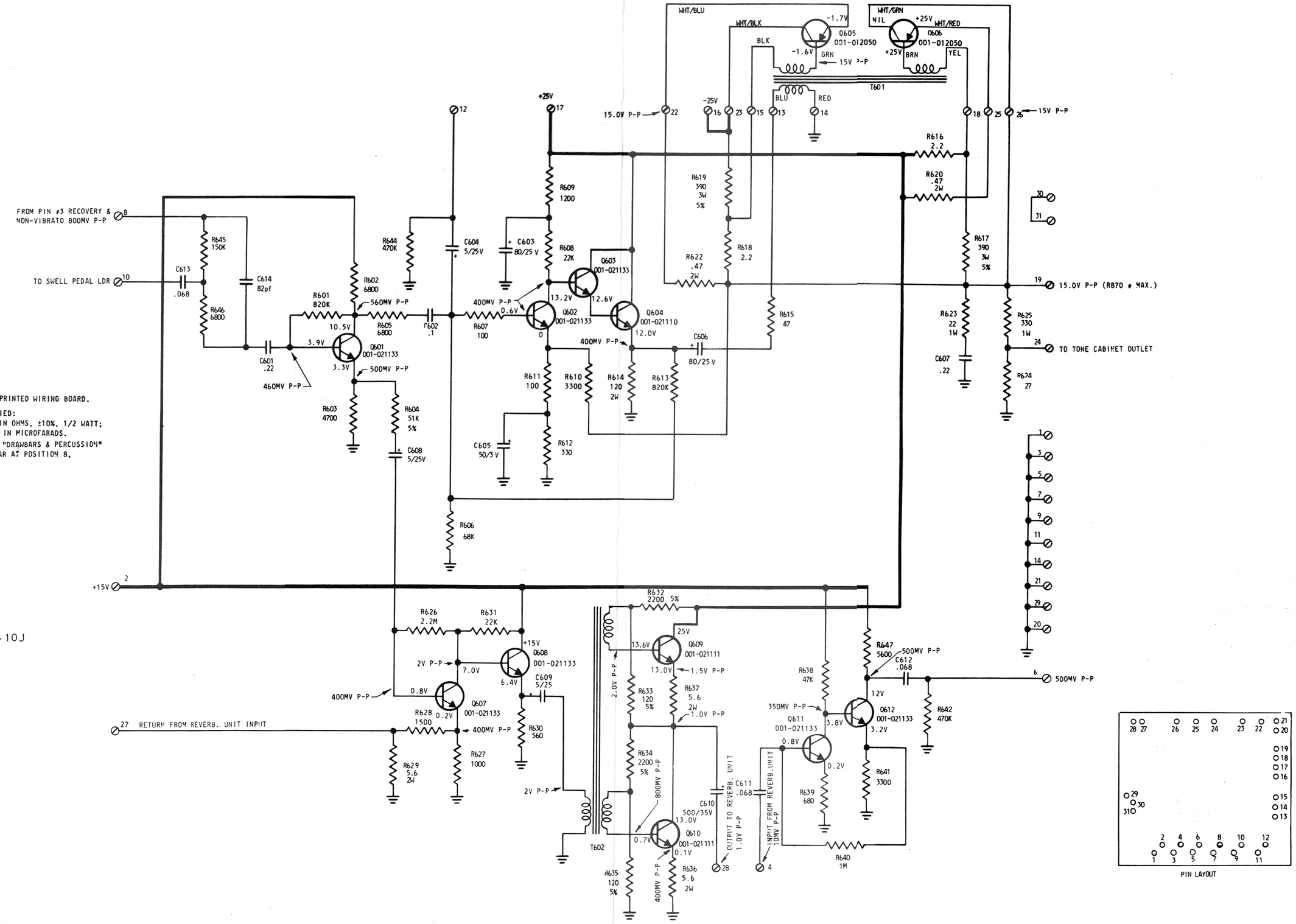

094-035052-10J

NOTES:

1. ⊘ SYMBOL: TERMINAL ON PRINTED WIRING BOARD.
2. UNLESS OTHERWISE SPECIFIED:
   ALL RESISTORS ARE IN OHMS, ±10%, 1/2 WATT;
   ALL CAPACITORS ARE IN MICROFARADS.
3. P-P READINGS TAKEN WITH "DRAWBARS & PERCUSSION" TAB DEPRESSED: 8' DRAWBAR AT POSITION 8, KEY 25 DEPRESSED.

FIGURE 5–5.
LAYOUT AND SCHEMATIC DIAGRAM,
POWER AND REVERBERATION AMPLIFIER BOARD,
124-000017

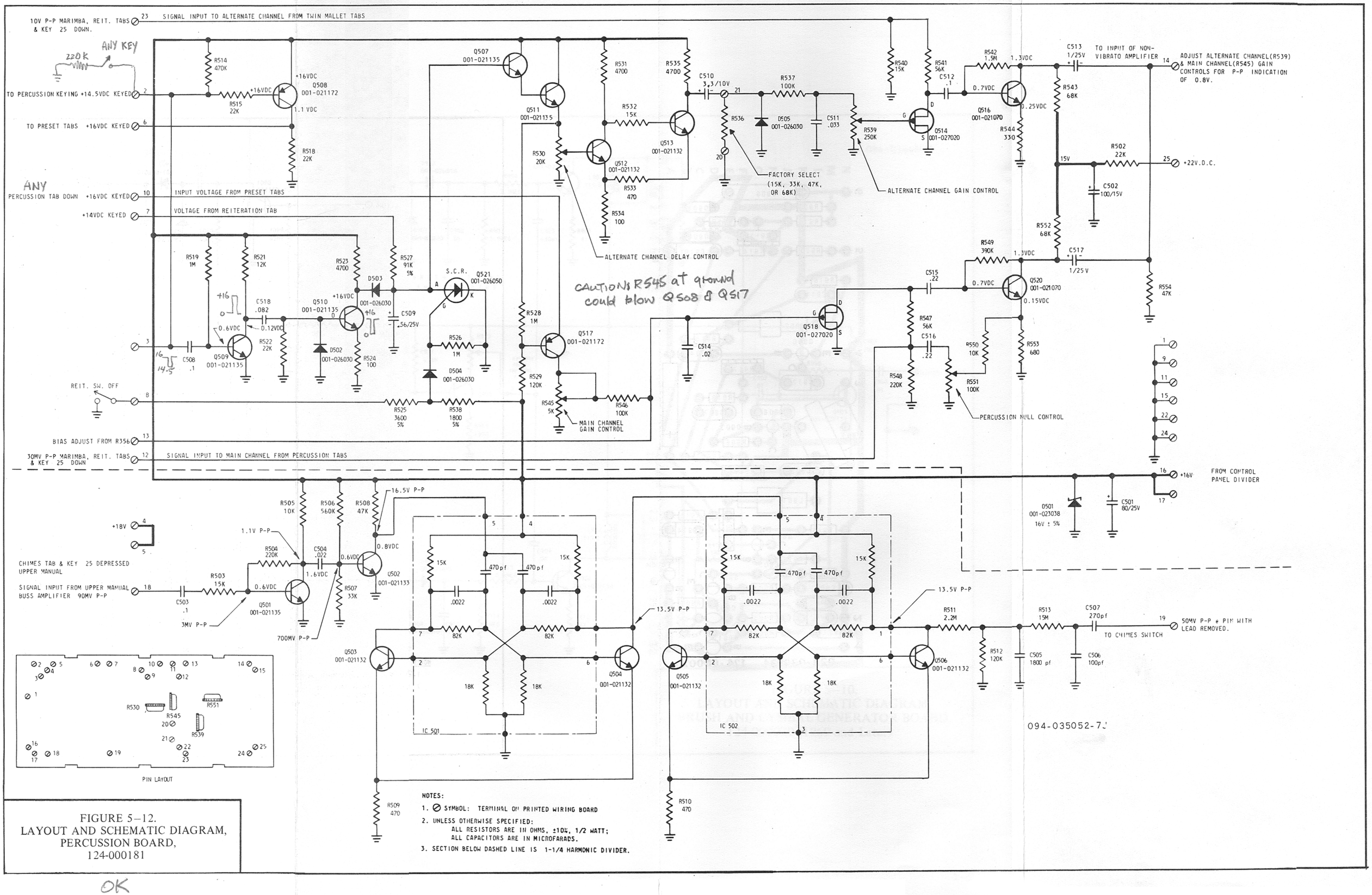

NOTES:

1. ⊘ SYMBOL: TERMINAL ON PRINTED WIRING BOARD
2. UNLESS OTHERWISE SPECIFIED:
   ALL RESISTORS ARE IN OHMS, ±10%, 1/2 WATT;
   ALL CAPACITORS ARE IN MICROFARADS.
3. SECTION BELOW DASHED LINE IS 1-1/4 HARMONIC DIVIDER.

FIGURE 5–12.
LAYOUT AND SCHEMATIC DIAGRAM,
PERCUSSION BOARD,
124-000181

OK

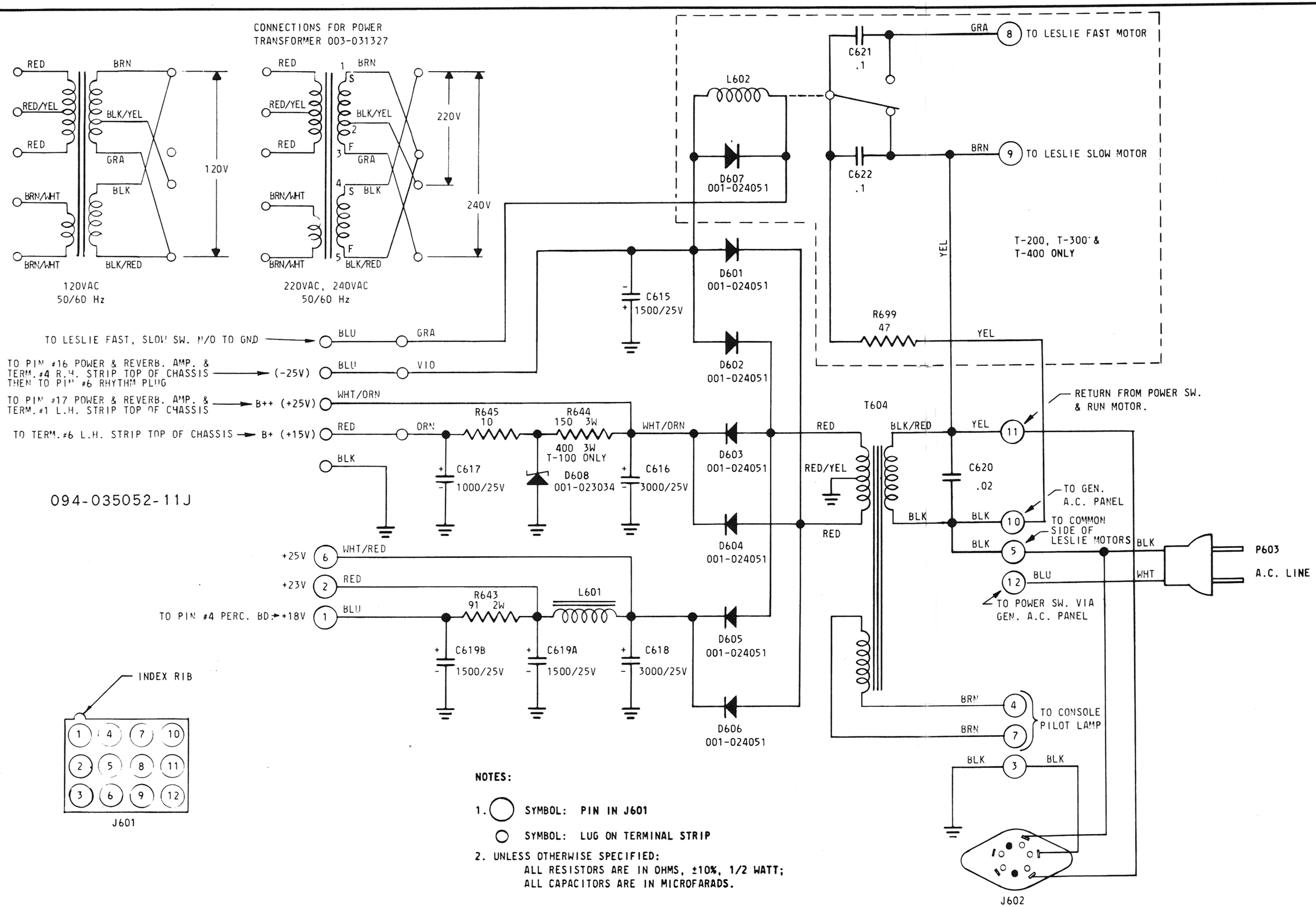

NOTES:

1. ◯ SYMBOL: PIN IN J601

   ○ SYMBOL: LUG ON TERMINAL STRIP

2. UNLESS OTHERWISE SPECIFIED:
   ALL RESISTORS ARE IN OHMS, ±10%, 1/2 WATT;
   ALL CAPACITORS ARE IN MICROFARADS.

FIGURE 5–16.
SCHEMATIC DIAGRAM,
POWER SUPPLY

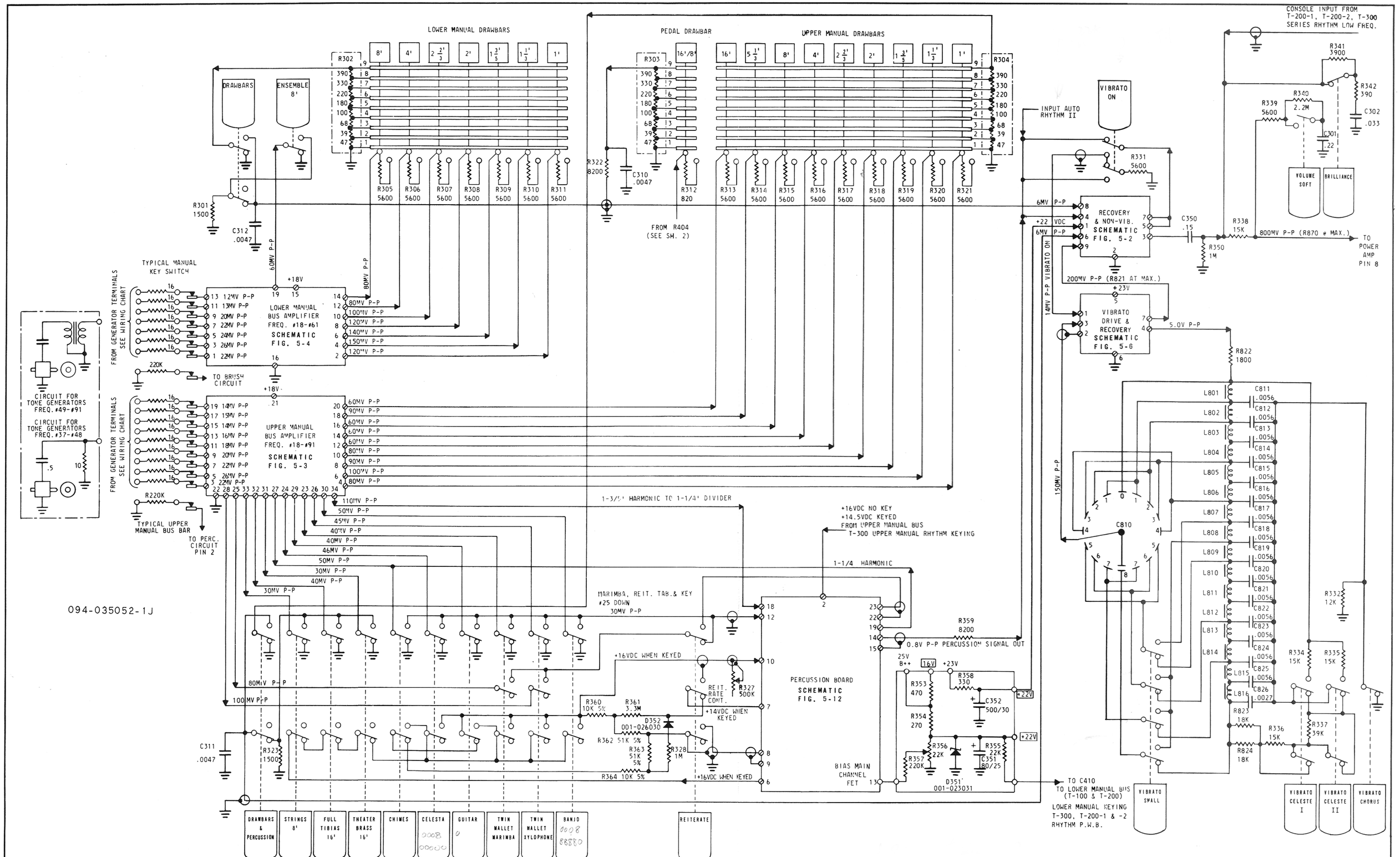

FIGURE 5–17. CONSOLE SHEET 1 of 2

NOTES:

1. COMPONENTS NO. 100 THRU 199 ARE LOCATED ON LOWER MANUAL BUS AMPLIFIER.
2. COMPONENTS NO. 200 THRU 299 ARE LOCATED ON UPPER MANUAL BUS AMPLIFIER.
3. COMPONENTS NO. 300 THRU 399 ARE LOCATED ON CONTROL ASSEMBLY.
4. COMPONENTS NO. 400 THRU 499 ARE LOCATED ON EXPRESSION CONTROL, END BLOCK ASSEMBLIES, LESLIE, BAFFLE BOARD & MISC.
5. COMPONENTS NO. 500 THRU 599 ARE LOCATED ON PERCUSSION BOARD.
6. COMPONENTS NO. 600 THRU 699 ARE LOCATED ON AMPLIFIER & POWER SUPPLY CHASSIS.
7. COMPONENTS NO. 700 THRU 799 ARE LOCATED ON PEDAL SWITCHBOARDS & PEDAL DIVIDER BOARD.
8. COMPONENTS NO. 800 THRU 899 ARE LOCATED ON VIBRATO PHASE SHIFT LINE, VIBRATO DRIVE & RECOVERY BOARD, RECOVERY & NON-VIBRATO BD.
9. UNLESS OTHERWISE SPECIFIED:
   (a) ALL RESISTANCE VALUES IN OHMS, ±10%
   (b) ALL RESISTORS 1/2 WATT
   (c) ALL CAPACITORS WITH DECIMAL VALUES IN MFD.
10. SYMBOL: +15V OR +16V OR +22V DENOTES CONNECTION POINTS OF SAME VOLTAGE (FOR REGULATED VOLTAGES ONLY).
11. ⊘ SYMBOL: TERMINAL ON PRINTED WIRING BOARD.
12. LESLIE & CIRCUITRY NOT USED ON T-100 SERIES.
13. BRUSH AND CYMBAL PWB (124-000020) NOT USED ON T-200-1, T-200-2, T-300, T-400.
14. P701, J701 OMITTED ON 1969 AND LATER PRODUCTION. REPLACED BY DIRECT WIRING.
15. ALL ORGAN LEVELS MEASURED WITH VOLUME SOFT TAB UP, BRILLIANCE TAB UP, EXPRESSION PEDAL AT MAXIMUM.
16. MAIN ORGAN LEVELS MEASURED WITH 8' DRAWBAR AT POSITION 8, DRAWBARS AND PERCUSSION TAB DOWN, VIBRATO TAB UP AND KEY #25 UPPER MANUAL DEPRESSED.
17. ALL SWITCHES SHOWN IN TAB UP POSITION.

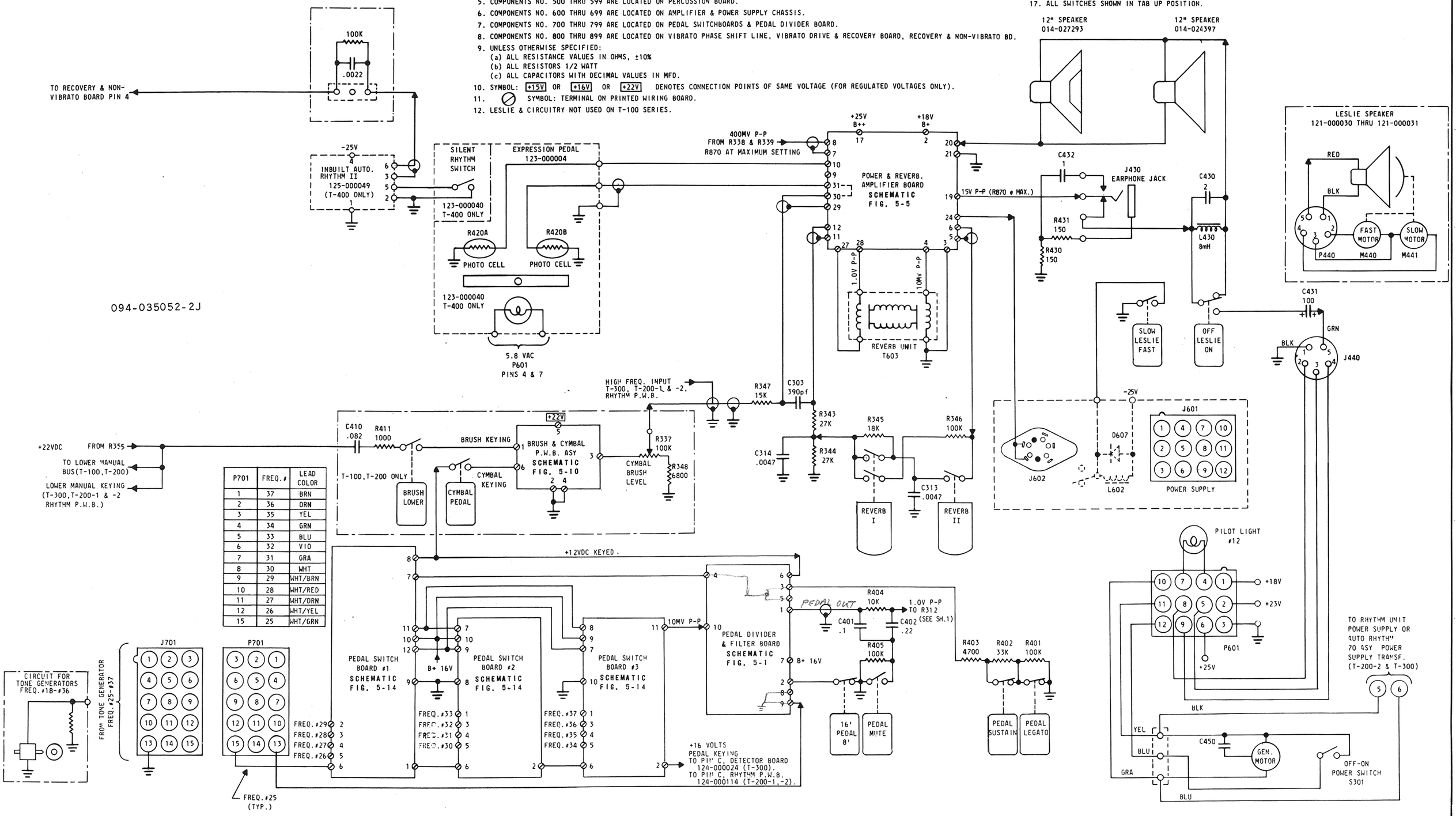

P701	FREQ.#	LEAD COLOR
1	37	BRN
2	36	ORN
3	35	YEL
4	34	GRN
5	33	BLU
6	32	VIO
7	31	GRA
8	30	WHT
9	29	WHT/BRN
10	28	WHT/RED
11	27	WHT/ORN
12	26	WHT/YEL
15	25	WHT/GRN

FIGURE 5–17. CONSOLE SHEET 2 of 2

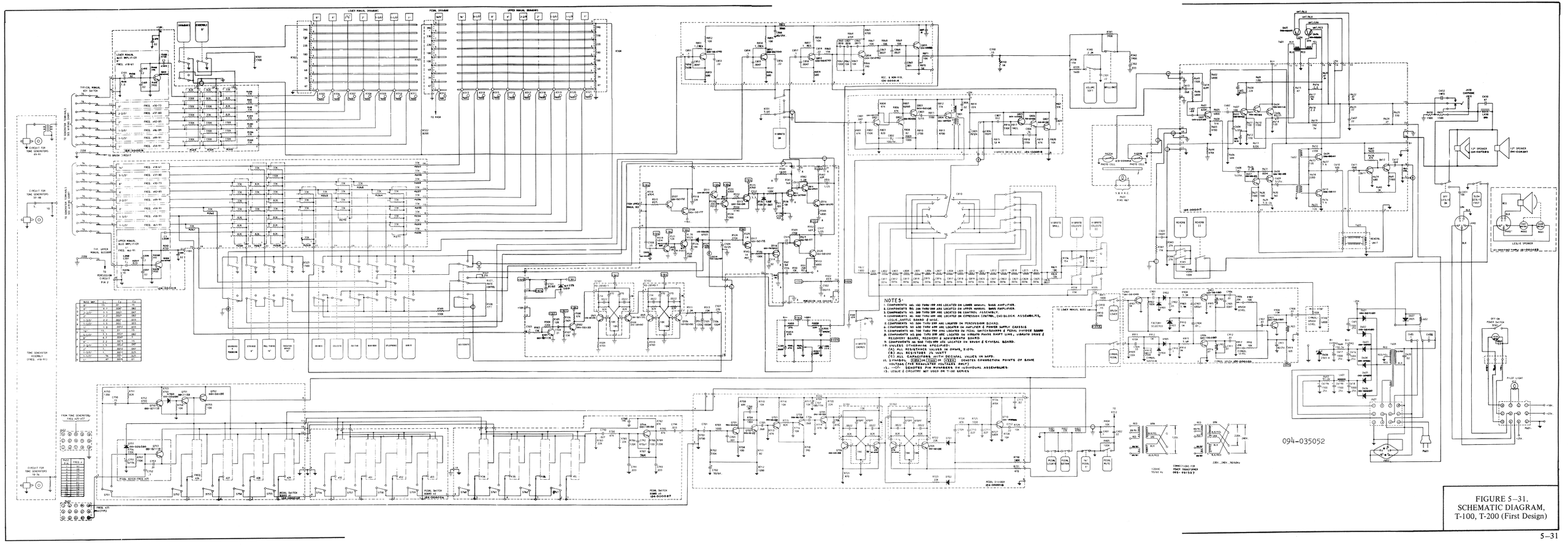
LOWER MANUAL BUSSBARS
PEDAL BUSSBARS
UPPER MANUAL BUSSBARS
LOWER MANUAL BASS AMPLIFIER
UPPER MANUAL BASS AMPLIFIER
TYPICAL MANUAL KEY SWITCH
TO GENERATOR CHANNELS
TONE GENERATOR ASSEMBLY (FREQ. #18-91)
REC. & NON-REC. 124-0000-A
VIBRATO DRIVE & REC. 124-0000-B
PHOTO CELL
S.P.D.T.S.C. PART #87
12" SPEAKER 124-0470-B
LESLIE SPEAKER
PEDAL SWITCH BOARD #1 124-0000-C
PEDAL SWITCH BOARD #2 124-0000-D
PEDAL SWITCH BOARD #3 124-0000-E
PEDAL DIVIDER 124-0000-B
PEDAL SUSTAIN
PEDAL SOSTENUTO
PEDAL MUTE
PEDAL SOFT
PEDAL VIBRATO
PEDAL LEGATO
PEDAL ACCENT
PEDAL ACCENT
PEDAL SOFT
PEDAL MUTE
PEDAL VIBRATO
PEDAL LEGATO

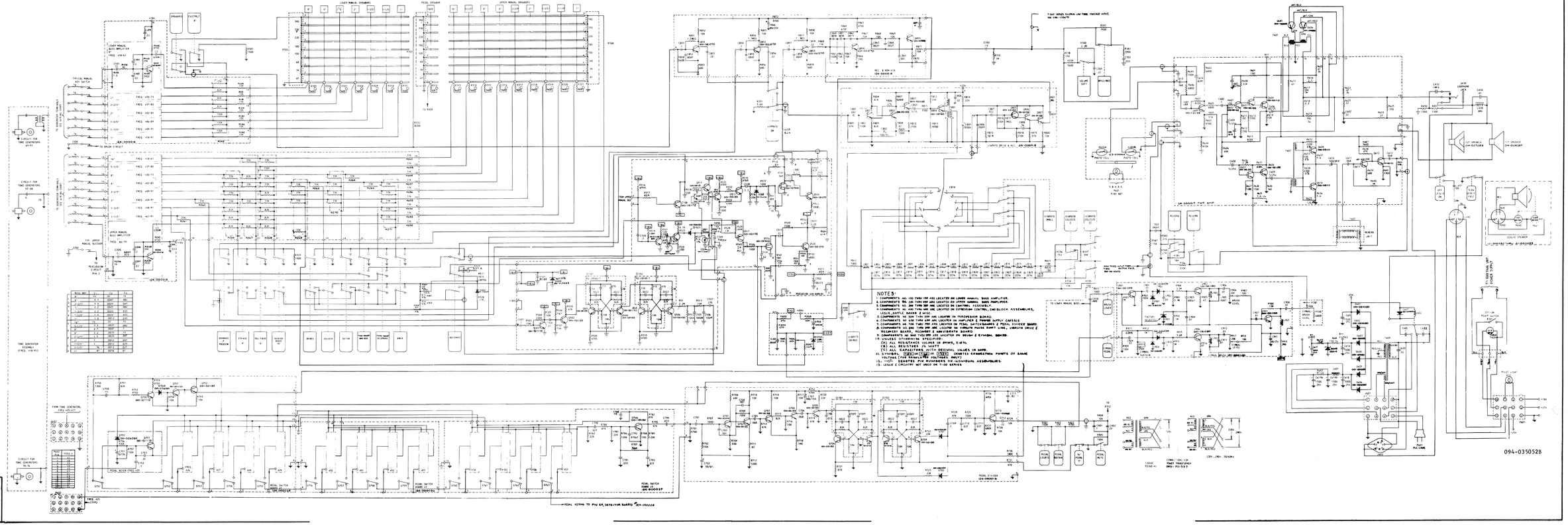

FIGURE 5–32.
SCHEMATIC DIAGRAM,
T-100, T-200 (Second Design)