KORG

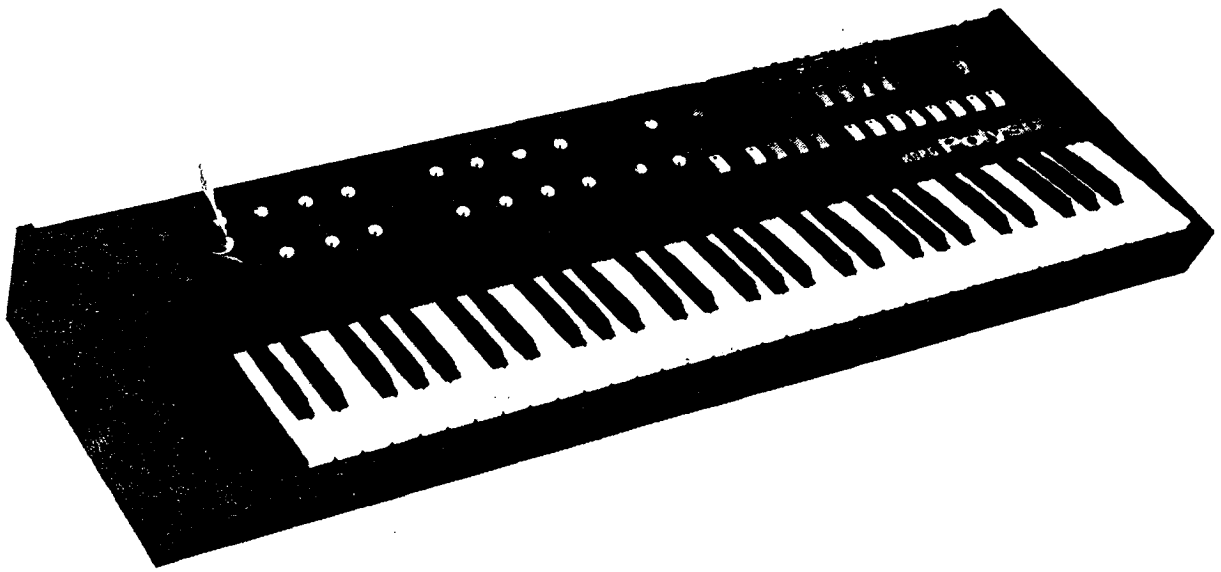

PROGRAMMABLE 6VOC SYNTHESIZER SERVICE MANUAL POLYSIX

CONTENTS

1. SPECIFICATIONS 1
2. STRUCTURAL DIAGRAM 2
3. BLOCK DIAGRAM 3
4. CIRCUIT DIAGRAM 4
5. PC BOARD 5
6. CONNECTOR FUNCTION 17
7. SEMI-FIXED RESISTORS DIAGRAM ... 18
8. ADJUSTMENT PROCEDURE 19
9. PARTS LIST 24

KEIO ELECTRONIC LABORATORY CORPORATION
TOKYO/JAPAN

1. SPECIFICATIONS

KEYBOARD	• 61 keys (C ~ C)
VOICES: 6	
(Program and edit functions are possible for items marked *)	
VCO*	• Octave Selector (16', 8', 4')
	• Waveform (◺ , PW, PWM)
	• Pulse Width/PWM Sensitivity Adjustment
	• PWM Speed
SUBOSCILLATOR*	• Off
	• 1 oct Down
	• 2 oct Down
VCF*	• Cutoff Frequency Adjustment
	• Resonance Adjustment
	• Envelope Generator Modulation
	• Sensitivity Adjustment
	• Keyboard Tracking Adjustment (0 ~ 150%)
ENVELOPE GENERATOR*	• Attack Time
	• Decay Time
	• Sustain Level
	• Release Time
VCA*	• Mode Switch (EG, ⊓⊔)
	• Attenuator (−10dB ~ +10dB, 11 Steps)
MODULATION GENERATOR*	• Frequency
	• Delay Time
	• Level
	• Modulation (VCO, VCF, VCA)
EFFECT*	• Mode (Off, Chorus, Phase, Ensemble)
	• Speed/Sensitivity Adjustment
KEY ASSIGN MODE	• Poly
	• Unison
	• Chord Memory
	• Hold
ARPEGGIATOR	• Speed
	• (0.4Hz ~ 40Hz)
	• Range (Full, 2 oct, 1 oct)
	• Mode (Up, Down Up/Down)
	• Latch (On/Off)
	• Arpeggio (On/Off)
TUNE	• ±50 Cents
BEND	• Sensitivity Adjustment (MAX ±1300 Cents)
OUTPUT	• Level Selector (Off, Low, High)
	• Volume
PROGRAMMER	• Bank (A, B, C, D)
	• Program (1 ~ 8)
	• Write (Enable, Disable)
TAPE INTERFACE	• Switch (Enable, Disable)
	• To Tape
	• From Tape
	• Verify
	• Error/Cancel
	• Tape Indicator x 2 (Found, Loading)
CONTROL WHEEL x 2	• Bend
	• MG
INPUT JACKS	• From Tape (With High/Low Switch)
	• Chord Memory (1∞)
	• Arpeggio Trigger In (1∞)
	• VCF fcM In (−5V ~ +5V)
OUTPUT JACKS	• To Tape (With High/Low Switch)
	• Headphone
	• Output
DIMENSIONS	• 980 (W) x 373 (D) x 132 (W) mm
WEIGHT	• 11.5 kg
ACCESSORIES INCLUDED	• Connection Cord
	• Plug Adaptor (Phone-To-Mini)
	• Memory Cassette
POWER CONSUMPTION	• Voltage (Local Voltage 50/60 Hz)
	Wattage (25 W)

2. STRUCTURAL DIAGRAM

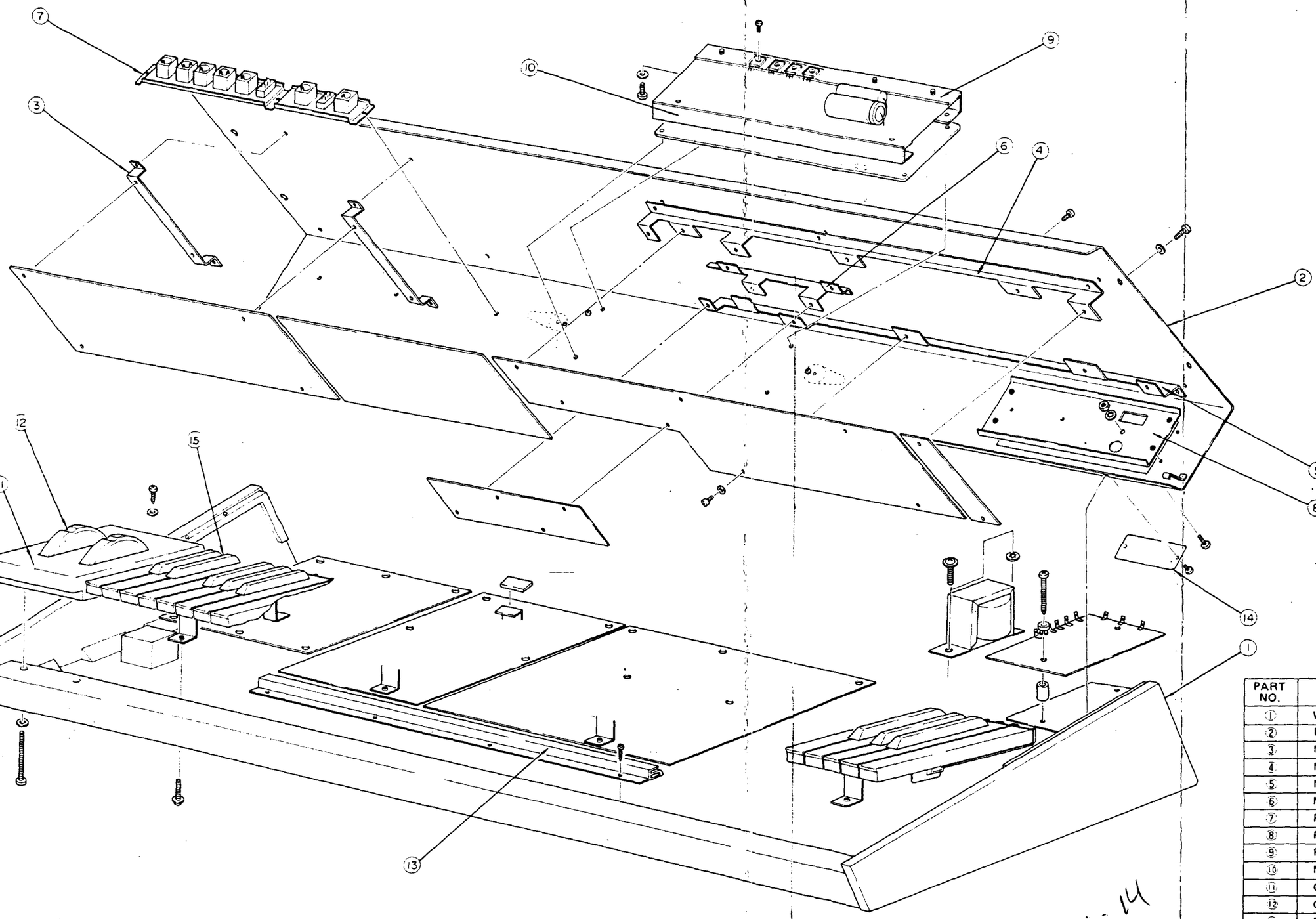

PART NO.	PART NAME	REMARKS
①	Wooden case	KOC-D10005
②	Front panel	KOC-C20111
③	Metal fitting of KLM-369	KOC-C40399
④	Metal fitting of KLM-371	KOC-C30179 2
⑤	Metal fitting of KLM-371	KOC-C30179 1
⑥	Metal fitting of KLM-371	KOC-C30179
⑦	Phone jack plate	KOC-C30178
⑧	Power plate	KOC-C40397
⑨	Radiation board	KOC-C40406
⑩	Metal fitting of KLM-376	KOC-C40405
⑪	Control panel	KOC-E20028
⑫	Control wheel	KOC-E40091
⑬	PCB rail	
⑭	Model number plate	KOC-C40144
⑮	Key board	ESK-701 (61 keys)

3. BLOCK DIAGRAM

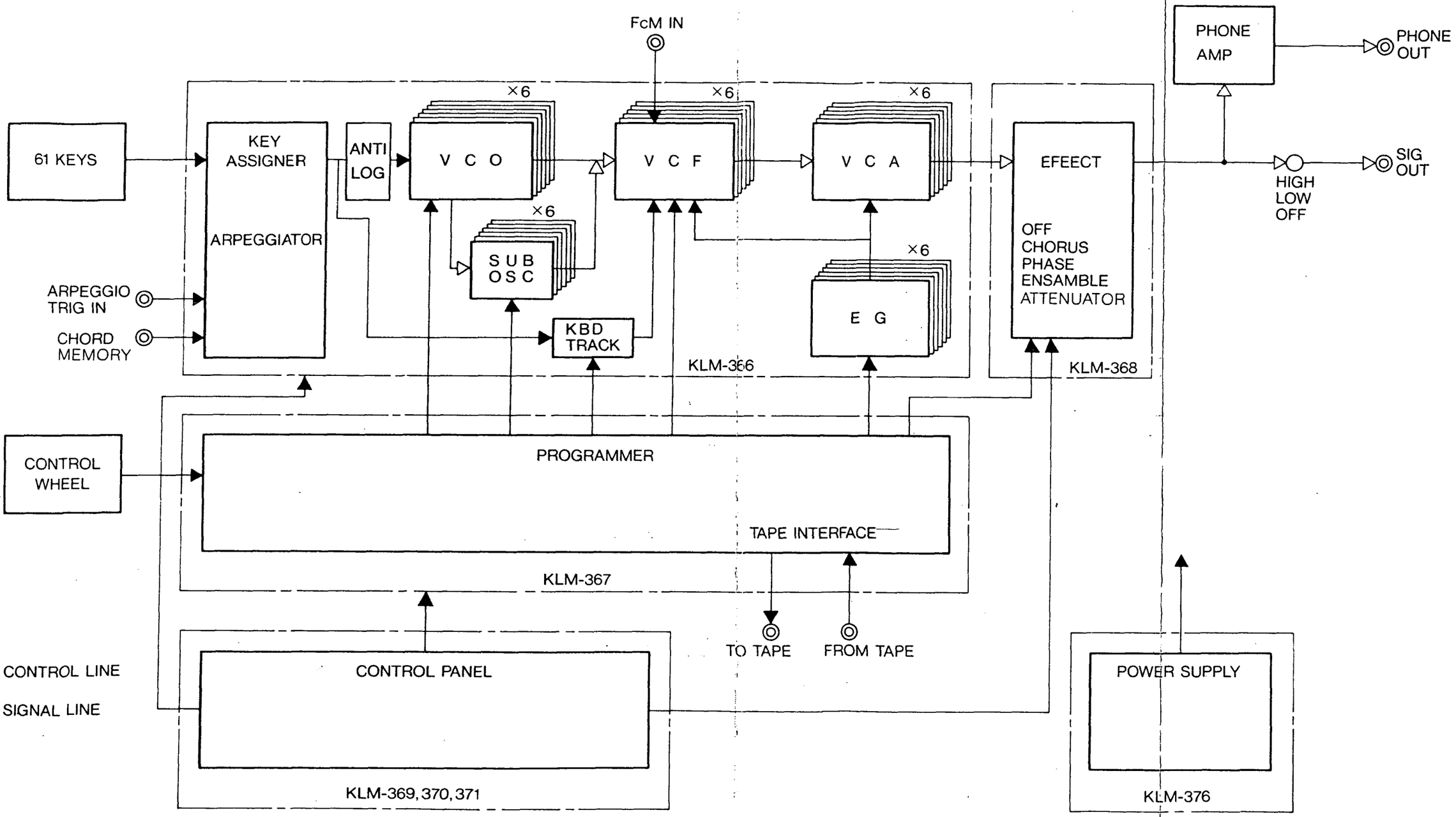

4. CIRCUIT DIAGRAM

KLM-366 KEY ASSIGNER (OLD PRODUCTION)

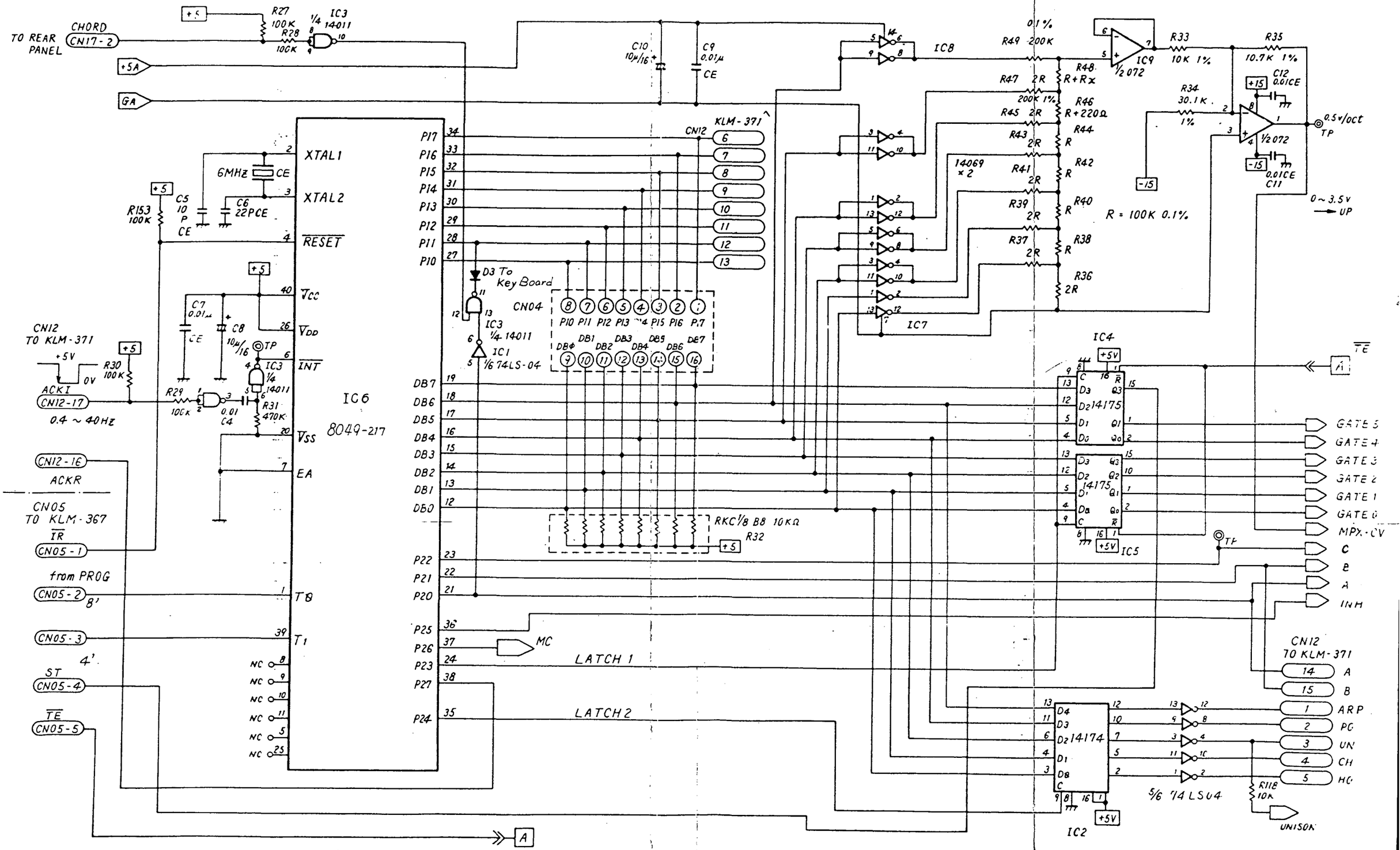

KLM-366 SYNTHESIZER (OLD PRODUCTION)

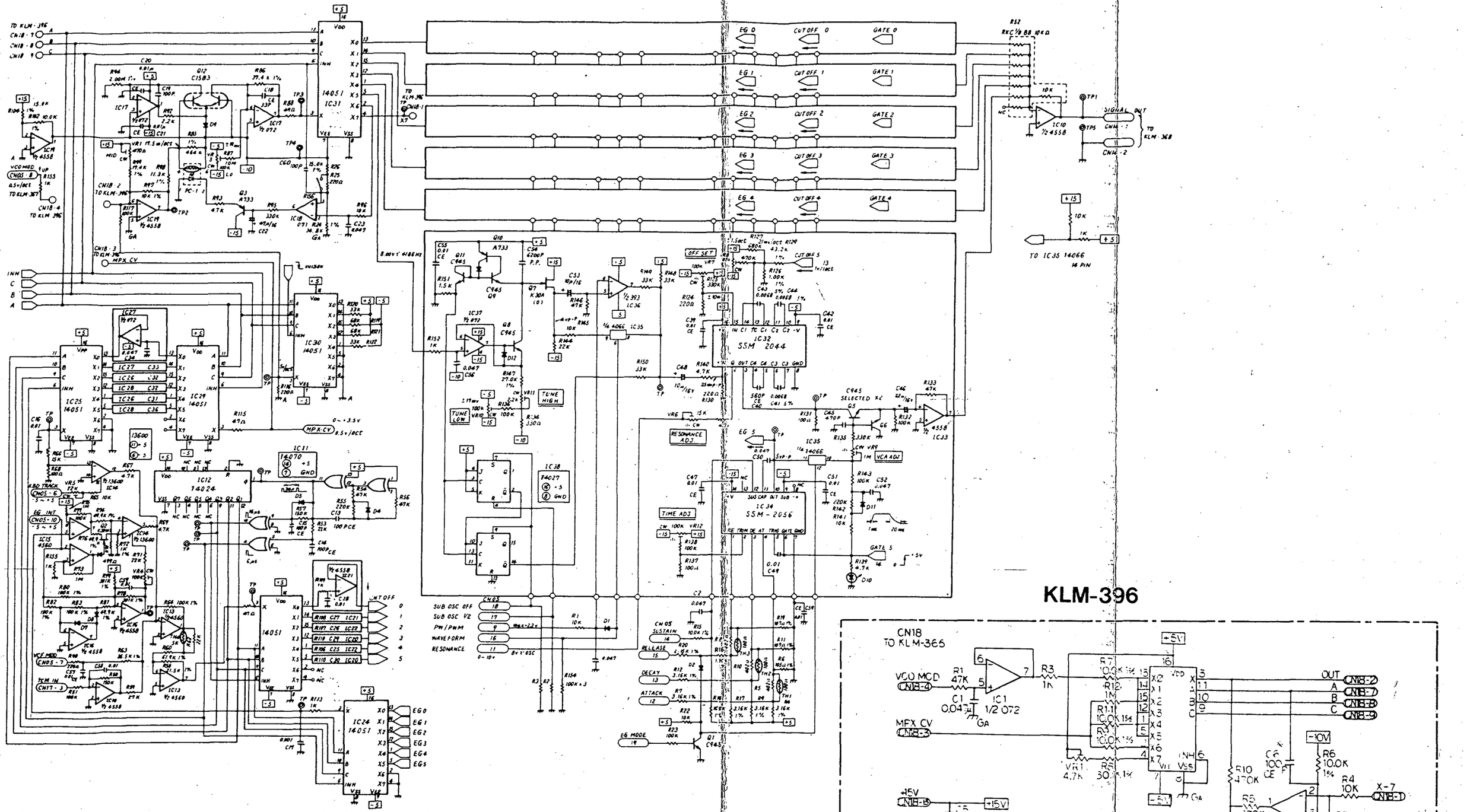

KLM-396

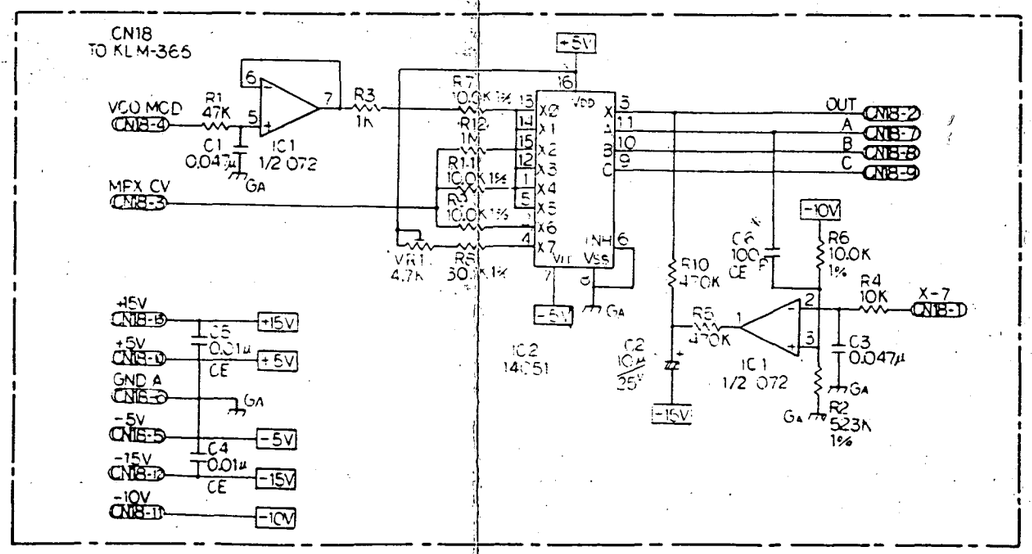

KLM-366 (NEW PRODUCTION)

(KLM-366 includes KLM-396)

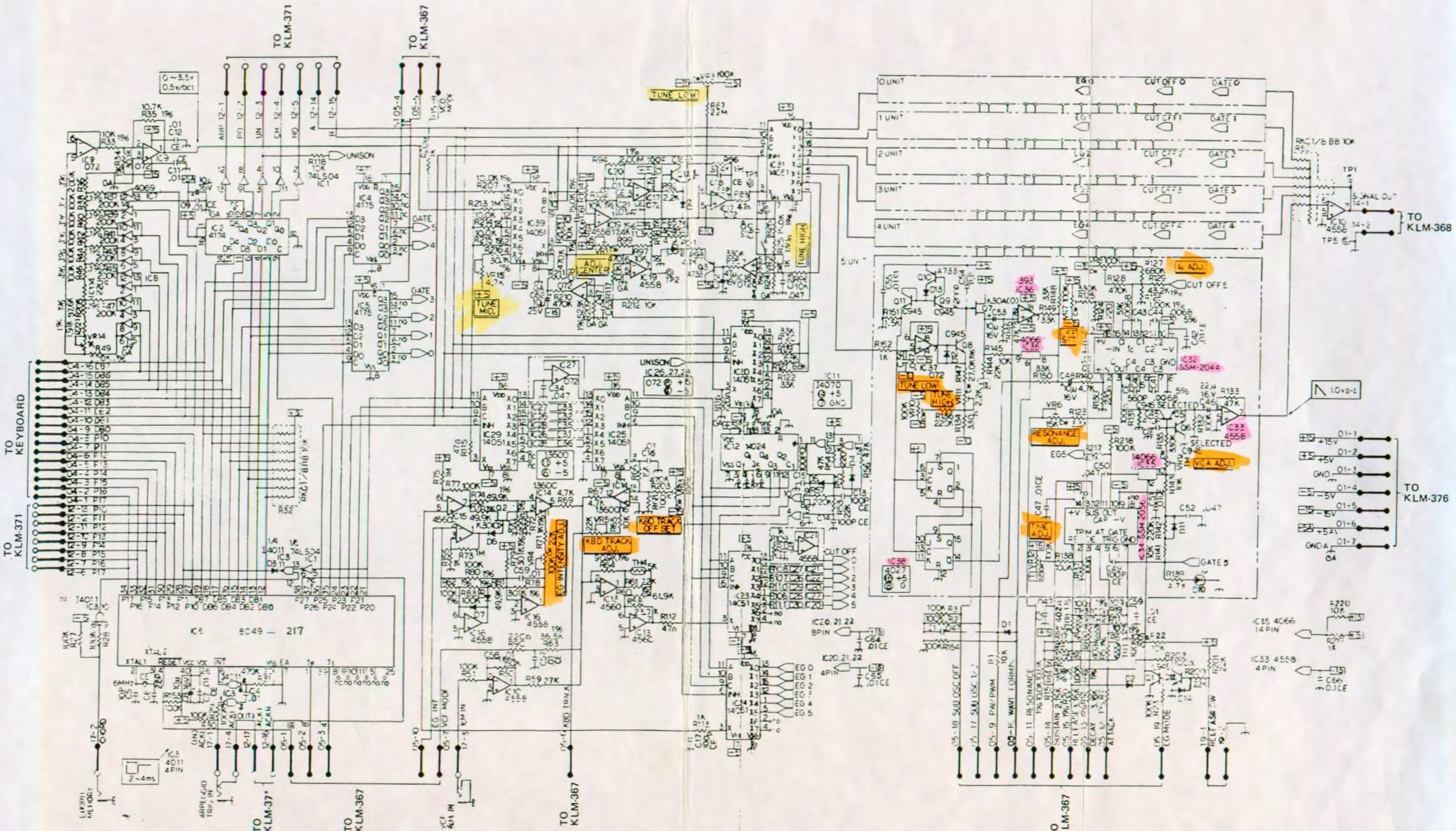

	C9, 17, 18, 37 x 3	
	NJM072	TL072
R87	22MΩ	10MΩ
R136	220KΩx6	100KΩx6

KLM-367

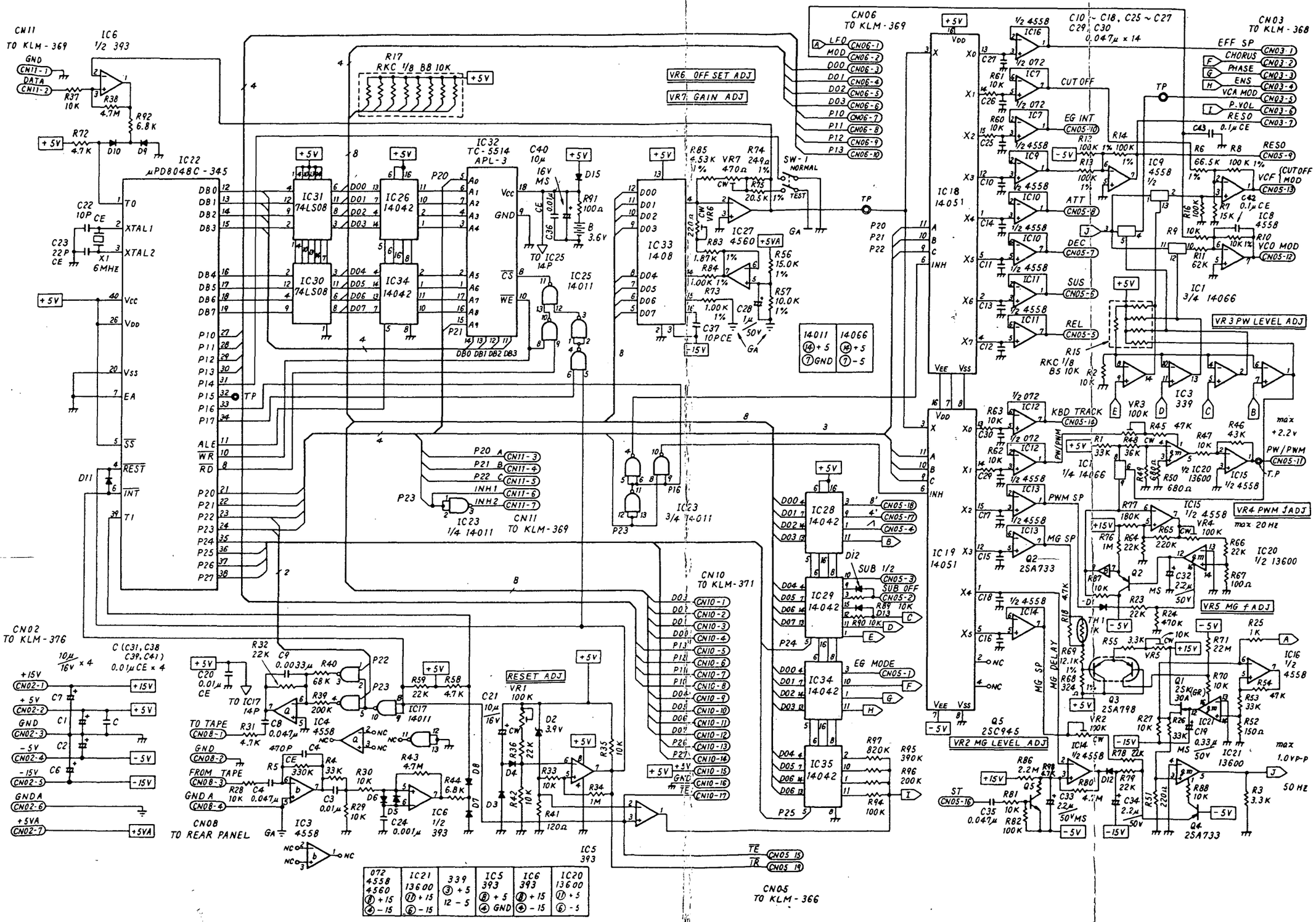
CN11 TO KLM-369
IC6 1/2 393
GND
DATA
R37 10K
R38 4.7M
R92 6.8K
R72 4.7K
D10
D9
IC22 μPD8048C-345
C22 10P CE
C23 22P CE
X1 6MHz
XTAL1
XTAL2
Vcc
Vdd
Vss
EA
SS
REST
INT
T1
T0
ALE
WR
RD
DB0
DB1
DB2
DB3
DB4
DB5
DB6
DB7
P10
P11
P12
P13
P14
P15
P16
P17
P20
P21
P22
P23
P24
P25
P26
P27
TP
D11
R17 RKC 1/8 B8 10K
+5V
VR6 OFF SET ADJ
VR7 GAIN ADJ
IC31 74LS08
IC26 14042
IC30 74LS08
IC34 14042
IC32 TC-5514 APL-3
C40 10μ 16V MS
C36 0.01μ CE
D15
R91 100Ω
8 3.6V
TO IC25 14P
IC25 14011
IC33 14081
R85 4.53K 1%
R74 249Ω 1%
VR7 470Ω
SW-1 NORMAL TEST
R75 20.5K 1%
GA
IC27 4560
+5VA
R83 1.87K 1%
R84 1.00K 1%
R73 1.00K 1%
R56 15.0K 1%
R57 10.0K 1%
C28 1μ 50V
C37 10PCE
-15V
14011 (14)+5 (7)GND
14066 (14)+5 (7)-5
CN06 TO KLM-369
LFO
MOD
D00
D01
D02
D03
P10
P11
P12
P13
CN06-1
CN06-2
CN06-3
CN06-4
CN06-5
CN06-6
CN06-7
CN06-8
CN06-9
CN06-10
IC18 14051
IC19 14051
IC16 1/2 4558
IC7 1/2 072
IC9 1/2 4558
IC10 1/2 4558
IC11 1/2 4558
IC12 1/2 072
IC13 1/2 4558
IC14 1/2 4558
C10~C18, C25~C27 C29, C30 0.047μ x 14
CUT OFF
EG INT
ATT
DEC
SUS
REL
KBD TRACK
PWM SP
MG SP
MG DELAY
CN03 TO KLM-368
EFF SP
CHORUS
PHASE
ENS
VCA MOD
P.VOL
RESO
CN03-1
CN03-2
CN03-3
CN03-4
CN03-5
CN03-6
CN03-7
CN05-10
CN05-8
CN05-7
CN05-6
CN05-5
CN05-18
CN05-4
R14 100K 1%
R13 100K 1%
R6 66.5K 1%
R8 100K 1%
RESO
VCF
CUTOFF MOD
CN05-9
CN05-13
C43 0.1μ CE
C42 0.1μ CE
R7 15K
R16 100K
IC8 4558
R9 10K
R11 62K
R10 10K 1%
VCO MOD
CN05-12
IC1 3/4 14066
VR3 PW LEVEL ADJ
R15 RKC 1/8 B5 10K
R2 10K
VR3 100K
IC3 339
max +2.2v
PW/PWM
CN05-11
T.P
R45 47K
R46 43K
R47 10K
IC15 1/2 4558
IC1 1/4 14066
R48 CW 36K
R49 5.6K
R50 680Ω
1/2 IC20 13600
VR4 PWM f ADJ
max 20Hz
R77 180K
R65 CW 100K
R76 1M
R64 22K
220K
R66 22K
IC20 1/2 13600
R67 100Ω
Q2 2SA733
C32 22μ MS 50V
R87 10K
D1
R23 22K
R24 470K
VR5 MG f ADJ
TH1 1K
R18 47K
R69 12.1K 1%
R68 324 1%
R55 3.3K
VR5
R25 1K
R71 22M
R70 10K
R54 47K
R53 33K
R52 150Ω
IC16 1/2 4558
Q1 2SK30A(GR)
Q3 2SA798
VR2 100K
VR2 MG LEVEL ADJ
R27 10K
R26 33K
C19 0.33μ 50V MS
IC21 13600
max 1.0Vp-p
50Hz
R3 3.3K
R78 22K
R79 22K
C34 2.2μ 50V
R51 220Ω
R88 10K
Q4 2SA733
IC14 1/2 4558
R86 2.2M
R98 4.7K
R80 4.7M
D12
C33 22μ 50V MS
Q5 2SC945
R81 10K
R82 100K
C35 0.047μ
ST
CN05-16
IC28 14042
IC29 14042
IC34 14042
IC35 14042
D12
D13
SUB 1/2
SUB OFF
EG MODE
R89 10K
R90 10K
R97 820K
R95 390K
R96 200K
R94 100K
CN10 TO KLM-371
CN10-1
CN10-2
CN10-3
CN10-4
CN10-5
CN10-6
CN10-7
CN10-8
CN10-9
CN10-10
CN10-11
CN10-12
CN10-13
CN10-14
CN10-15
CN10-16
CN10-17
GND
TE
CN05-18
CN05-17
CN05-4
CN05-3
CN05-2
CN05-1
IC23 3/4 14011
IC23 1/4 14011
P20 A
P21 B
P22 C
INH1
INH2
CN11-3
CN11-4
CN11-5
CN11-6
CN11-7
CN11 TO KLM-369
P16
P23
CN02 TO KLM-376
C (C31, C38 C39, C41) 0.01μ CE x 4
10μ 16V x 4
+15V
+5V
GND
-5V
-15V
GNDA
+5VA
CN02-1
CN02-2
CN02-3
CN02-4
CN02-5
CN02-6
CN02-7
C1
C2
C6
C7
R32 22K
C9 0.0033μ
R40 68K
R39 200K
C8 0.047μ
R31 4.7K
TO TAPE
FROM TAPE
GND A
CN08 TO REAR PANEL
CN08-1
CN08-2
CN08-3
CN08-4
C20 0.01μ CE
TO IC17 14P
IC17 14011
IC4 4558
R59 22K
R58 4.7K
C21 10μ 16V
RESET ADJ
VR1 100K
D2 3.9V
D3
D4
R36 22K
R42 10K
R33 10K
R34 1M
R35 10K
R41 120Ω
C4 470P
R5 330K
R4 33K
R30 10K
R43 4.7M
R44 6.8K
C3 0.01μ
R29 10K
C24 0.001μ
D5
D6
D7
D8
IC3 4558
IC6 1/2 393
IC5 393
072 4558 4560 (8)+15 (4)-15
IC21 13600 (11)+15 (6)-15
339 (3)+5 12-5
IC5 393 (8)+5 (4)GND
IC6 393 (8)+15 (4)-15
IC20 13600 (11)+5 (6)-5
TE
TR
CN05 15
CN05 19
CN05 TO KLM-366

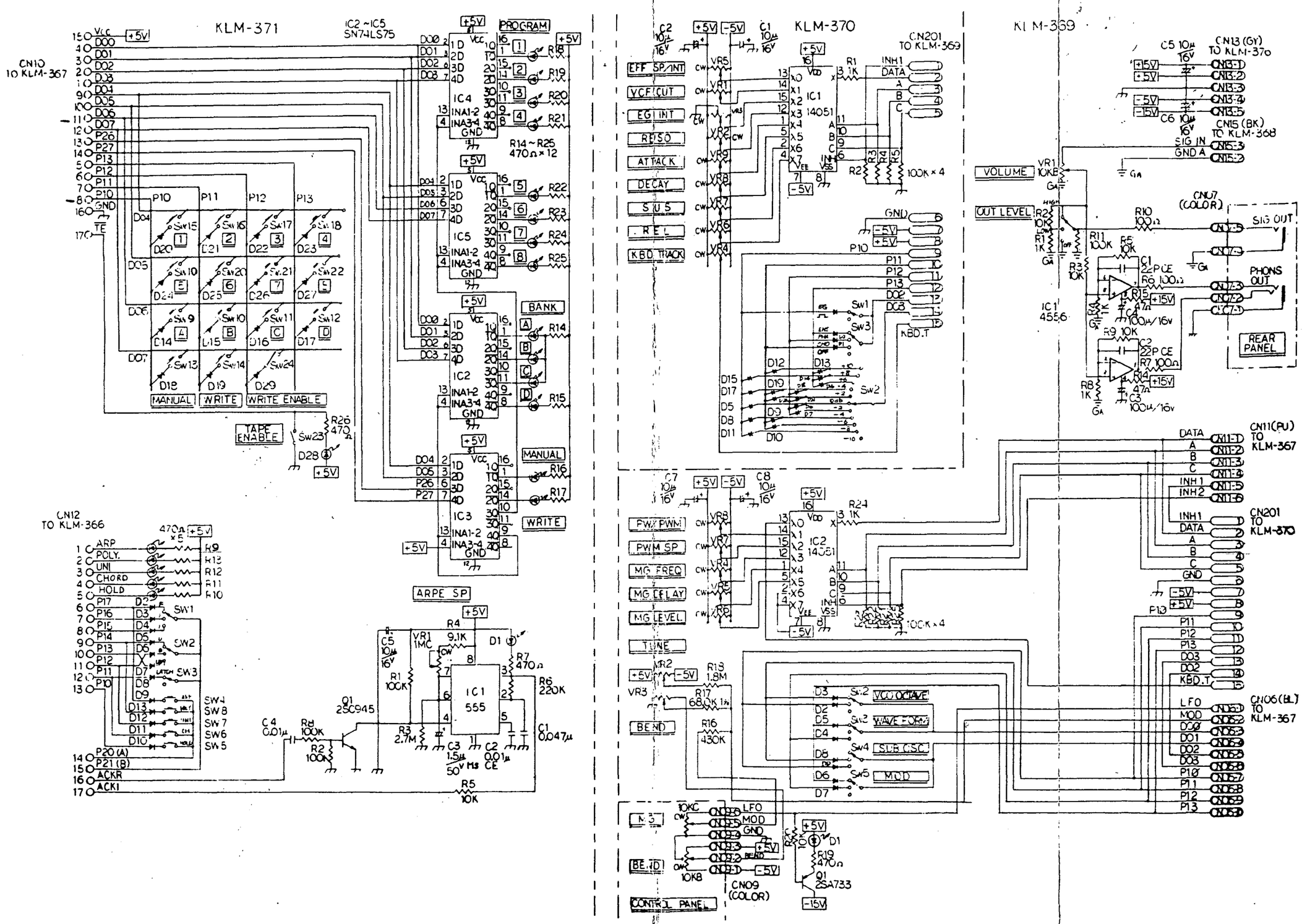
KLM-371
IC2 ~ IC5
SN74LS75
CN10
TO KLM-367
PROGRAM
BANK
MANUAL
WRITE
WRITE ENABLE
TAPE ENABLE
R14 ~ R25
470Ω × 12
CN12
TO KLM-366
ARP
POLY.
UNI
CHORD
HOLD
ARPE SP
IC1
555
Q1
2SC945
KLM-370
CN201
TO KLM-369
EFF SP/INT
VCF CUT
EG INT
RESO
ATTACK
DECAY
SUS
REL
KBD TRACK
IC1
14051
100K × 4
PW/PWM
PWM SP
MG FREQ
MG DELAY
MG LEVEL
TUNE
BEND
VCO OCTAVE
WAVE FORM
SUB OSC
MOD
CONTROL PANEL
CN09
(COLOR)
Q1
2SA733
KLM-369
CN13 (GY)
TO KLM-370
CN15 (BK)
TO KLM-368
VOLUME
OUT LEVEL
CN07
(COLOR)
SIG OUT
PHONS OUT
REAR PANEL
IC1
4556
CN11(PU)
TO KLM-367
CN201
TO KLM-370
CN06(BL)
TO KLM-367

KLM-368 EFFECT

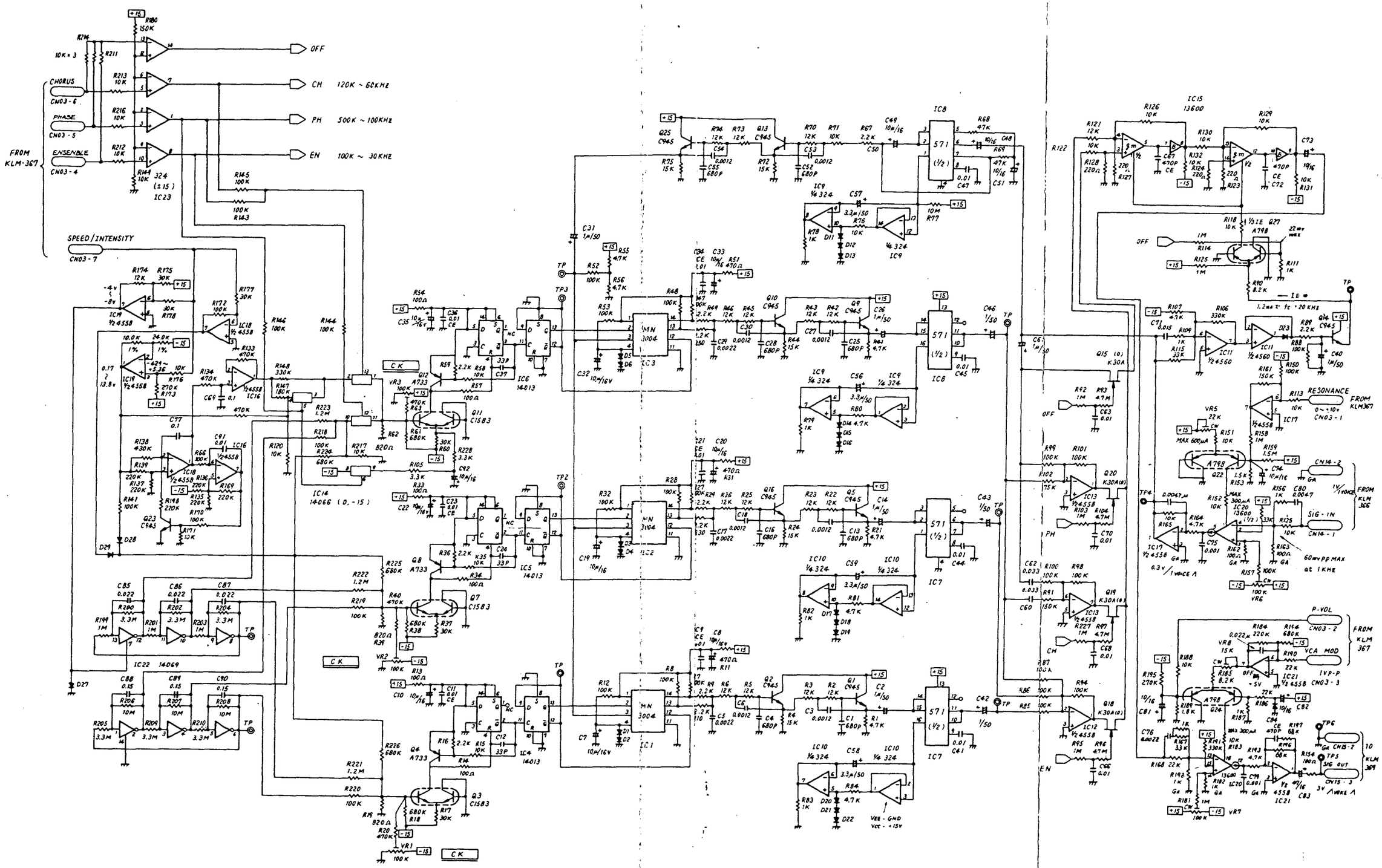

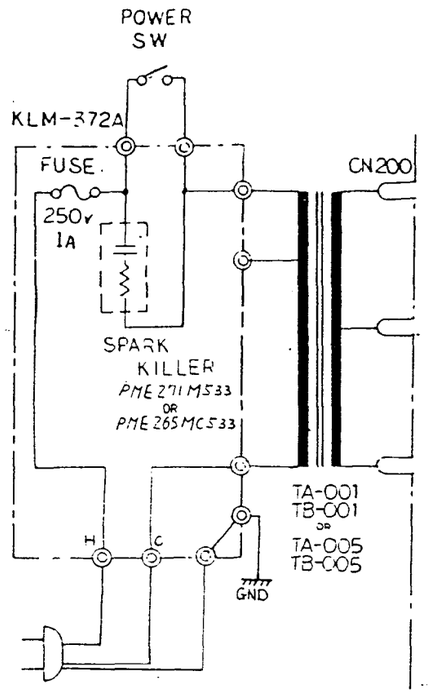

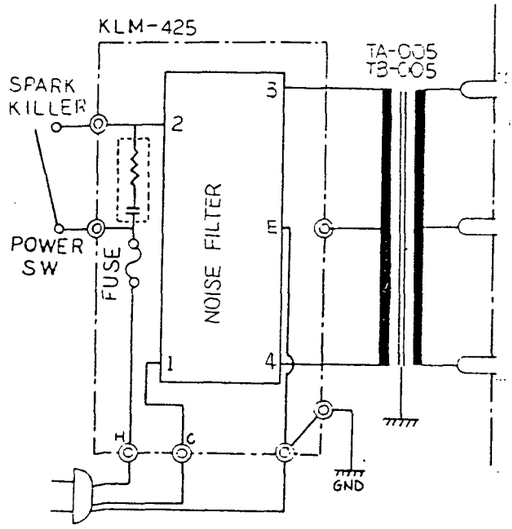

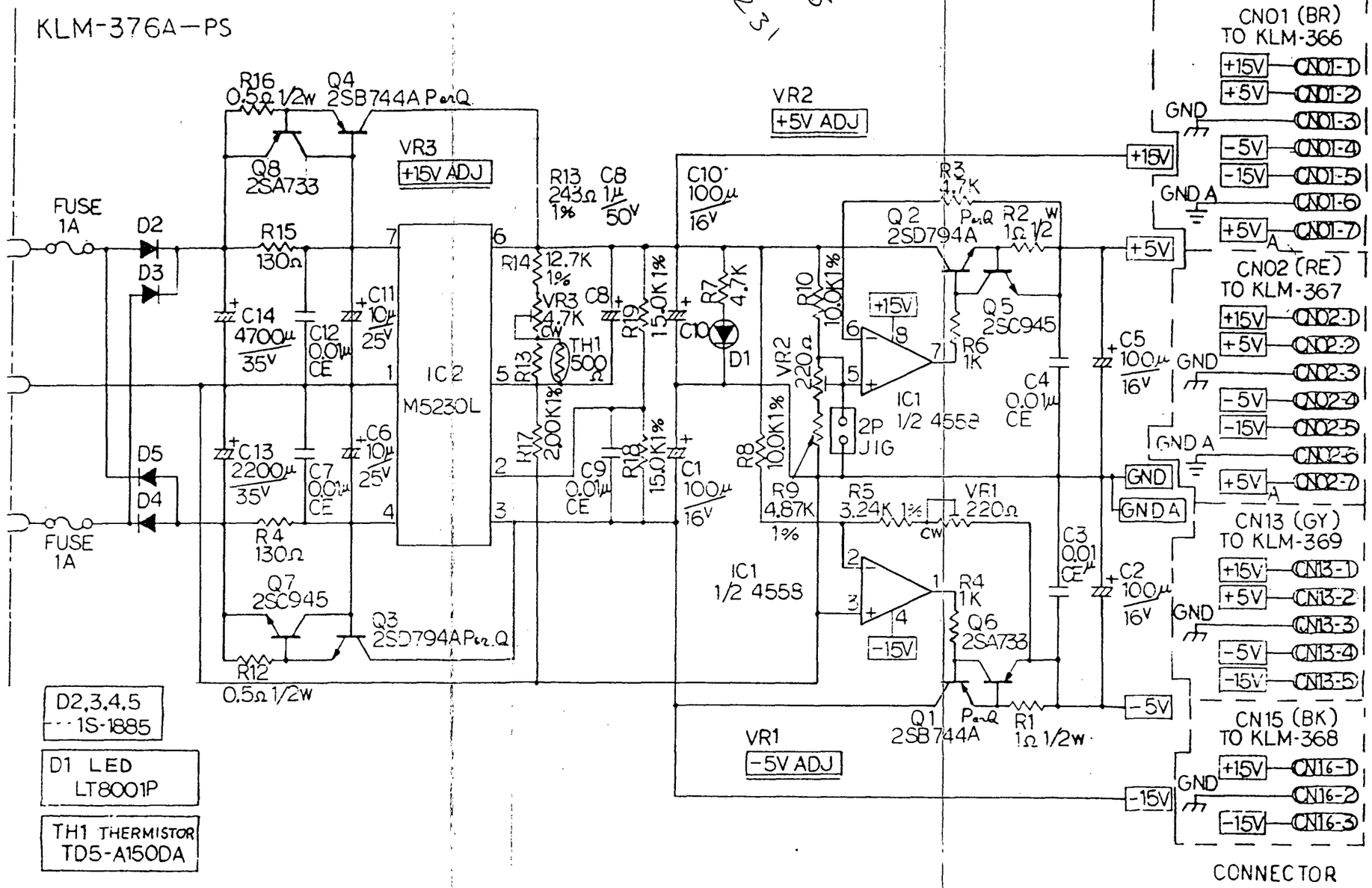

D2,3,4,5 1S-1885

D1 LED LT8001P

TH1 THERMISTOR TD5-A150DA

	TA		TB	
VOLTAGE	100V	120V	220V	240V
3	BROWN	ORANGE	YELLOW	GREEN
4	WHITE		WHITE	
NC	ORANGE	BROWN	GREEN	YELLOW

5.PC BOARD

KLM-366 (NEW PRODUCTION)

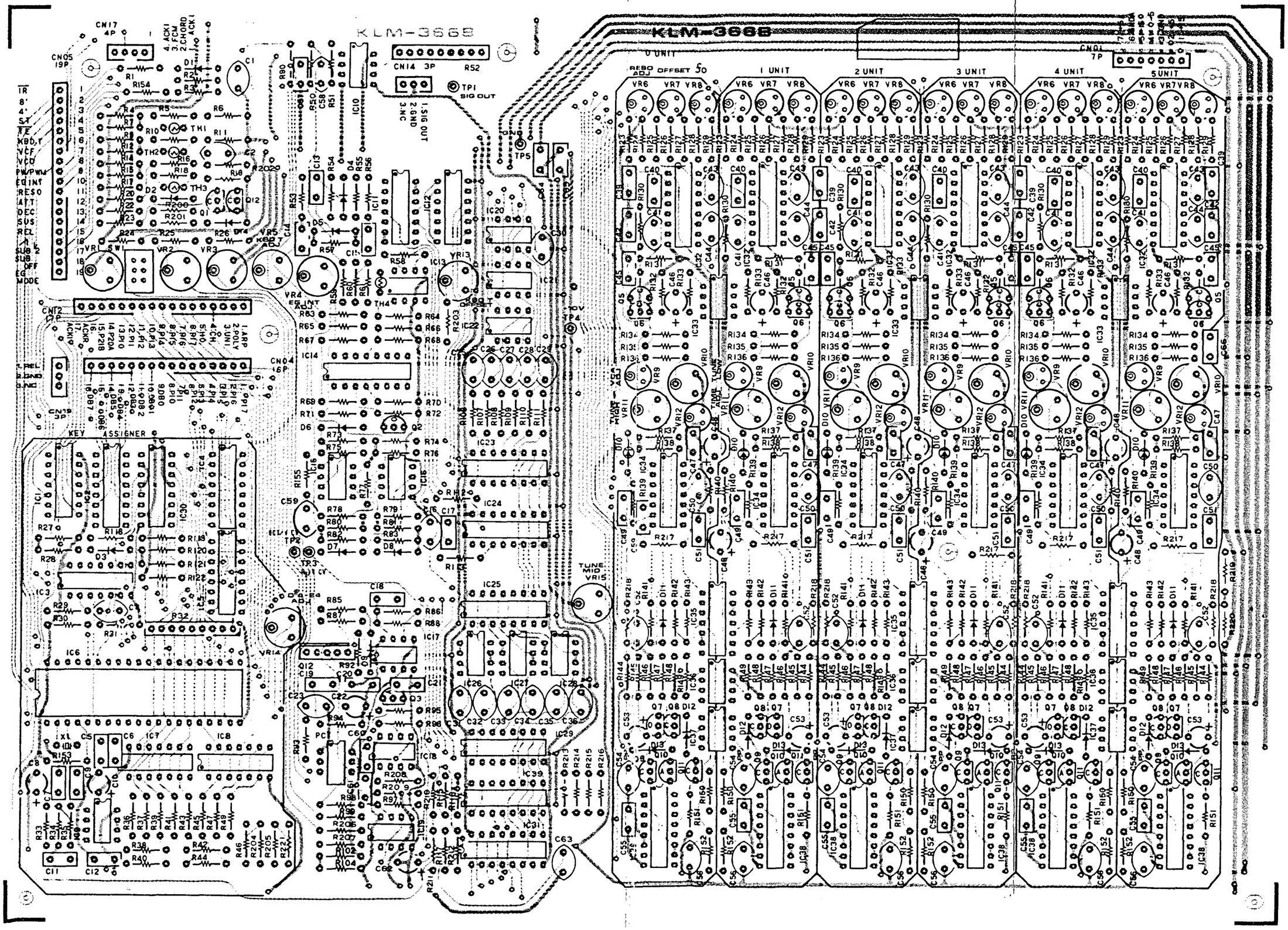

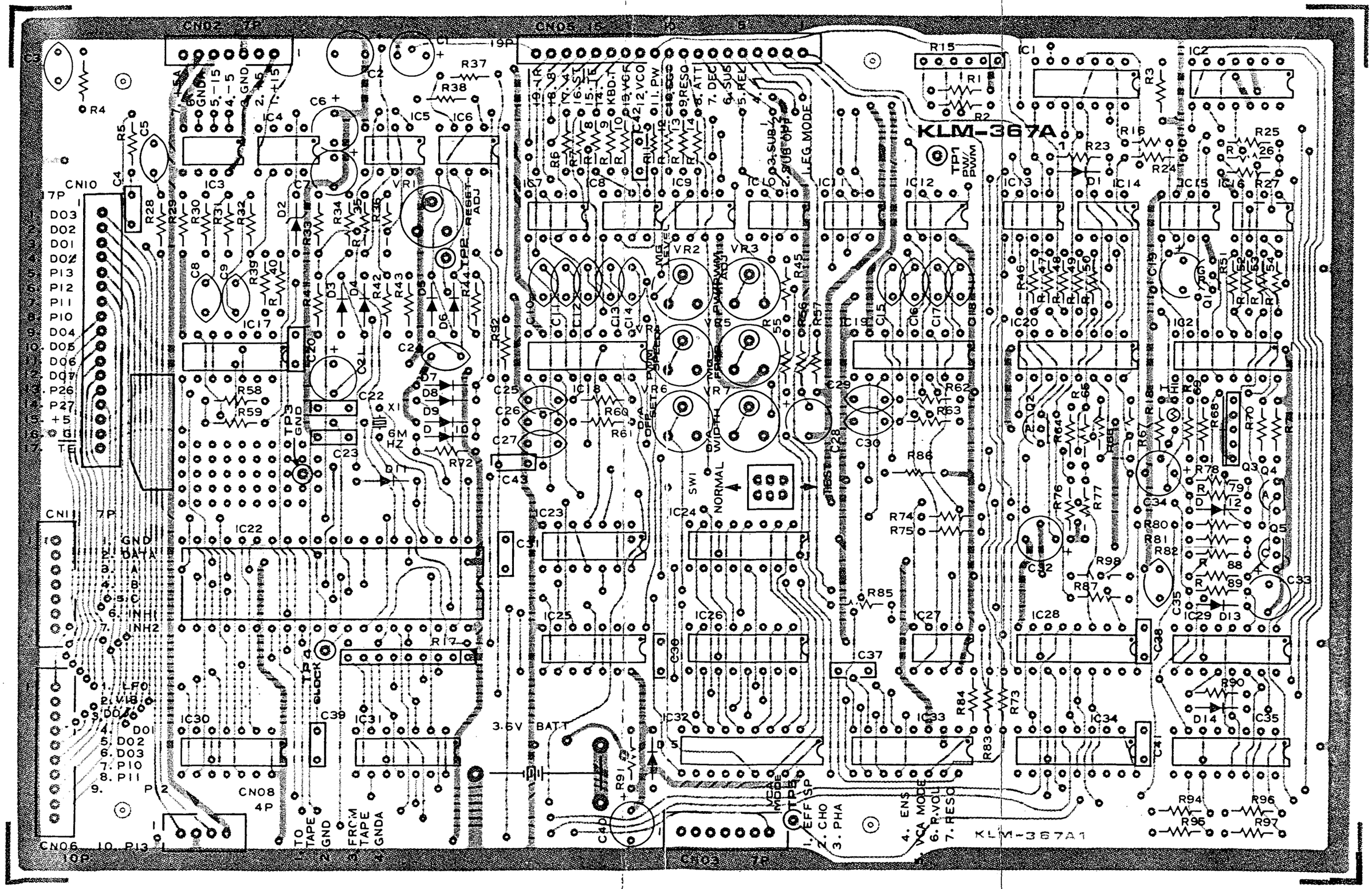
KLM-367A
KLM-367A1
CN02 7P
CN05 15 10 5 1
CN10 17P
CN11 7P
CN06 10P
CN08 4P
CN03 7P
3.6V BATT
NORMAL
TEST
1. EFF SP
2. CHO
3. PHA
4. ENS
5. VCA MODE
6. R.VOL
7. RESO
TO TAPE GND
FROM TAPE GNDA
1. GND
2. DATA
3. A
4. B
5. C
6. INH1
7. INH2
1. LFO
2. VIB
3. DO3
4. DO1
5. DO2
6. DO3
7. P10
8. P11
9. P12
10. P13
D03
D02
D01
D00
P13
P12
P11
P10
D04
D05
D06
D07
P26
P27
+5
G
TE

KLM-368 EFFECT

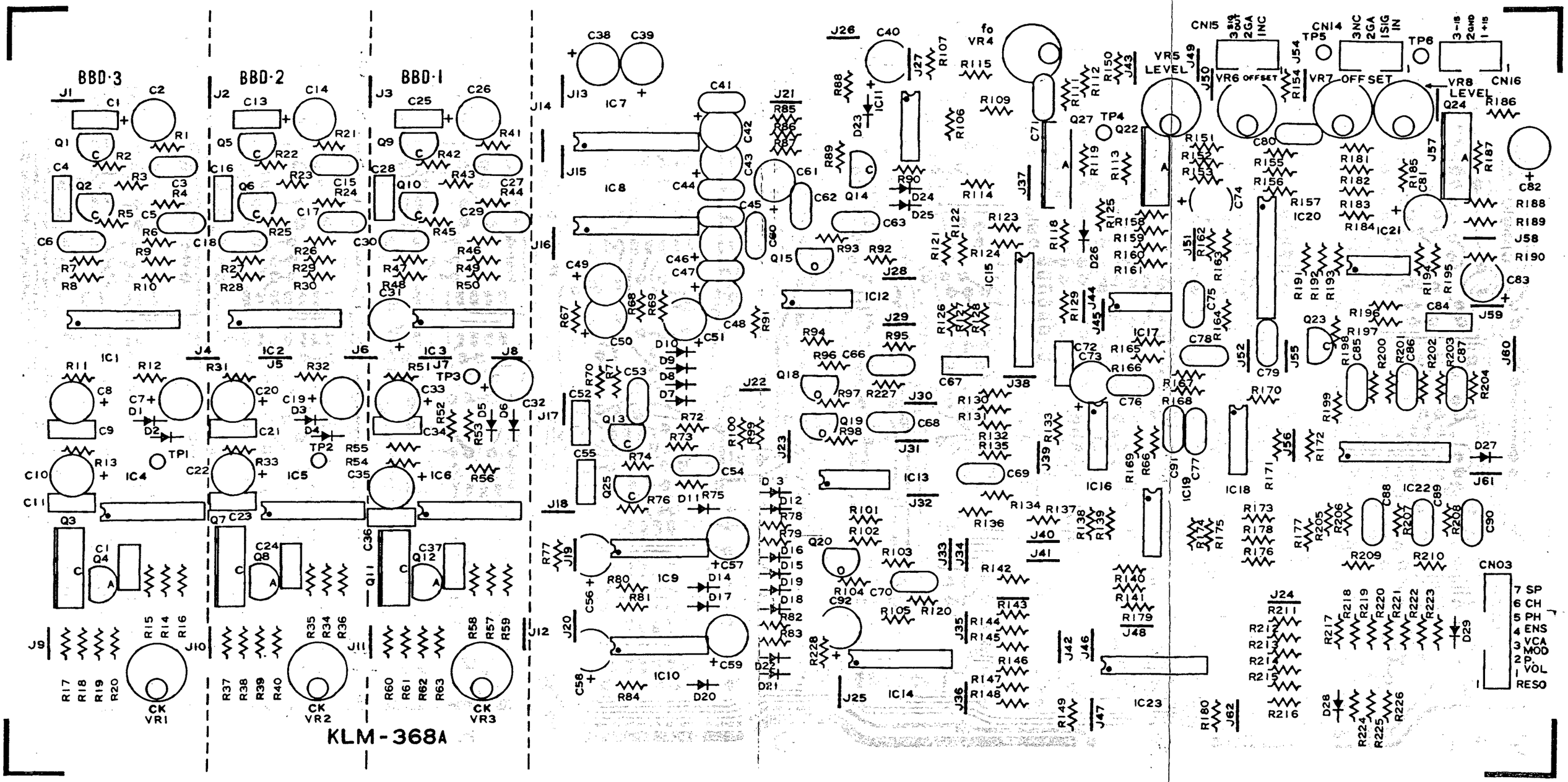

KLM-368A

KLM-369

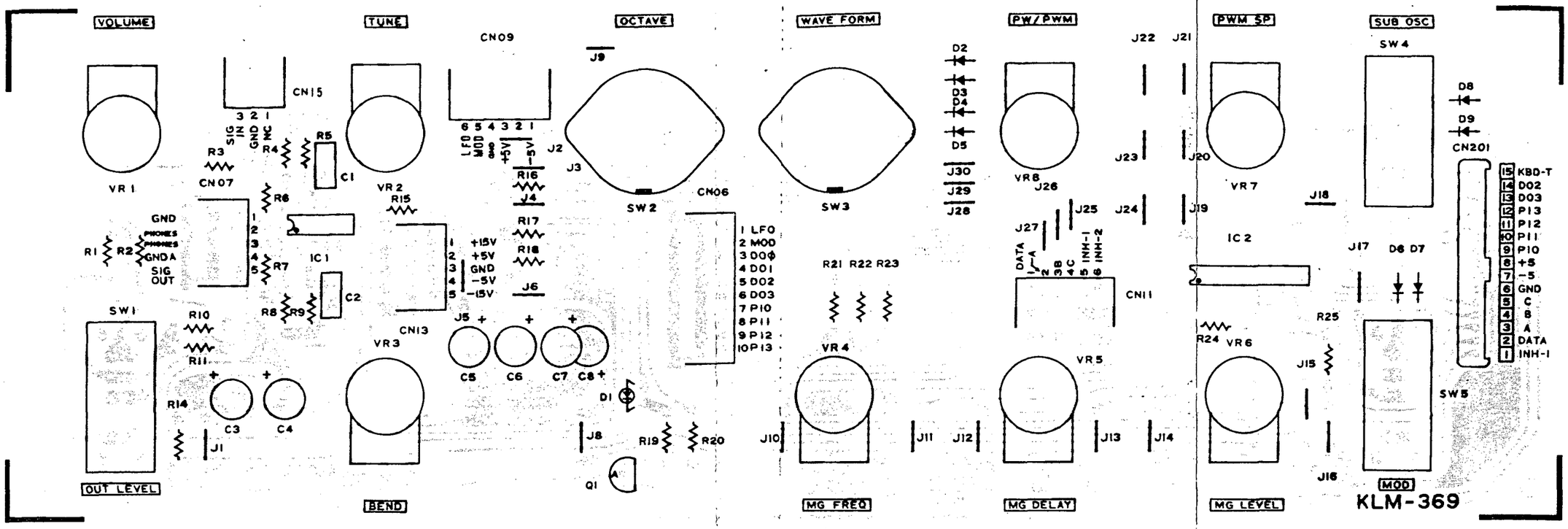

KLM-370

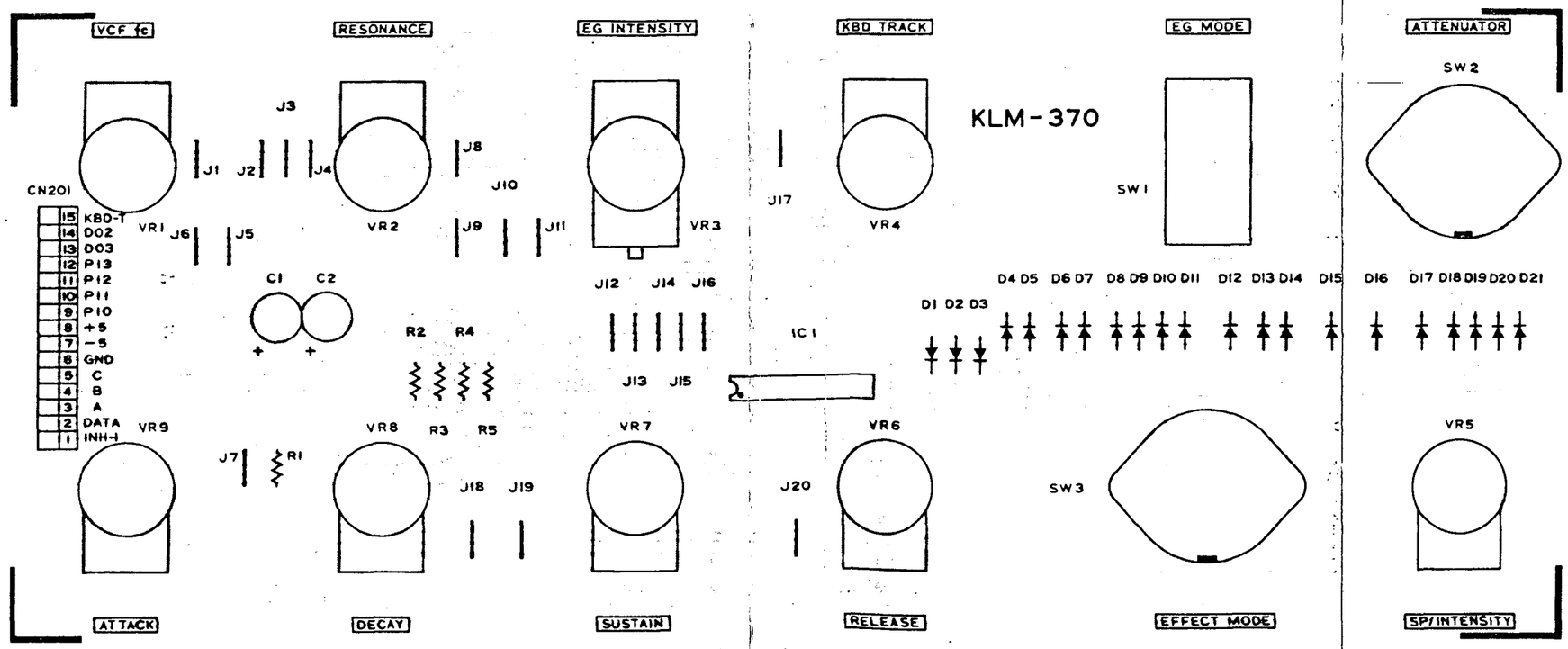

KLM-370

KLM-371

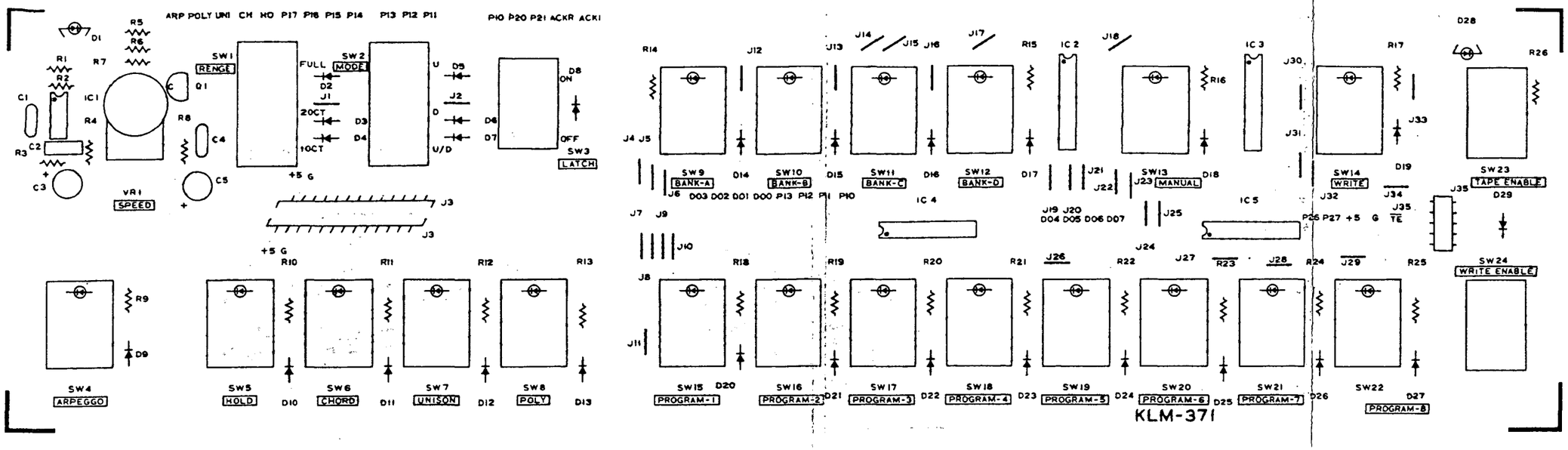

KLM-376

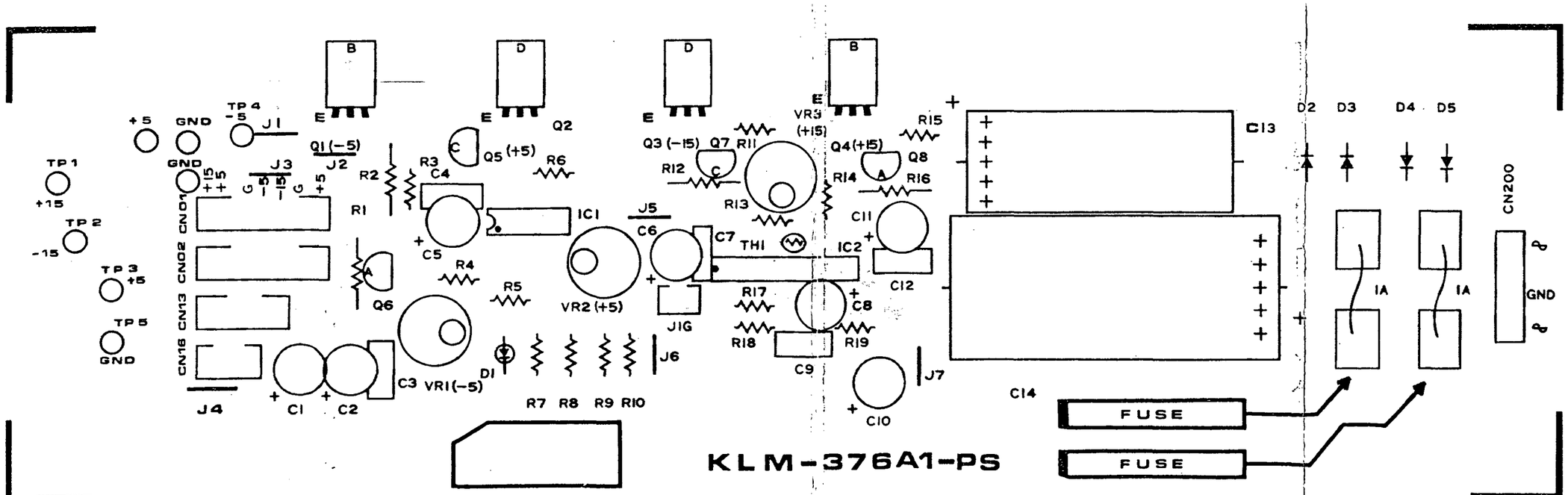

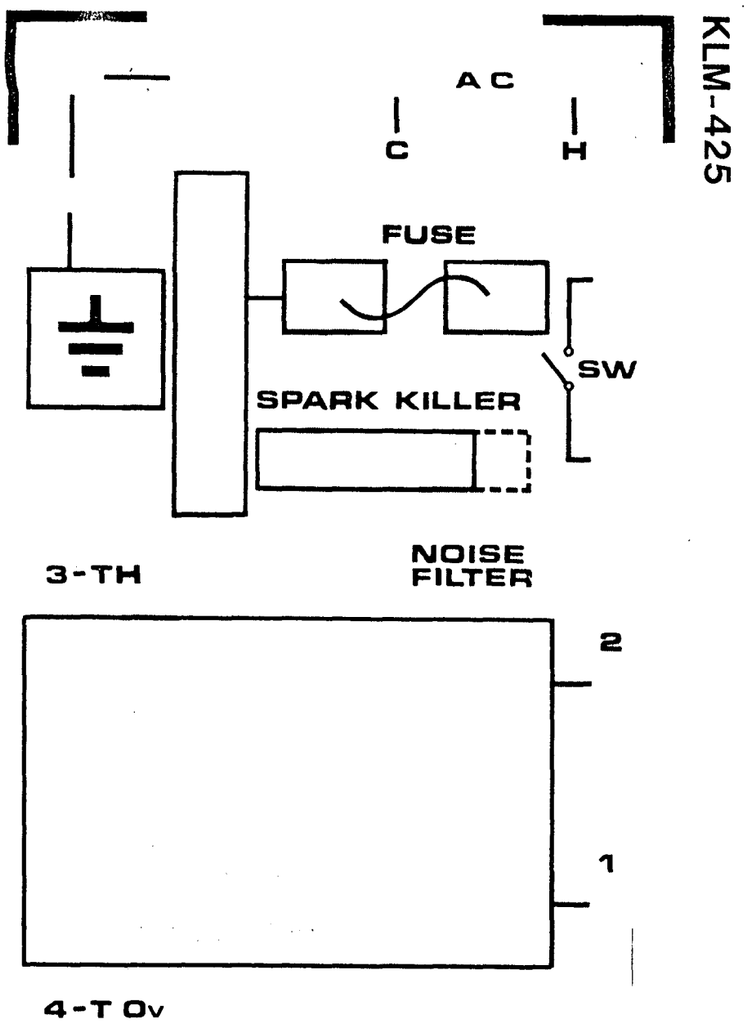
KLM-425
AC
C
H
FUSE
SW
SPARK KILLER
3-TH
NOISE FILTER
2
1
4-TOv
NC
KLM-425

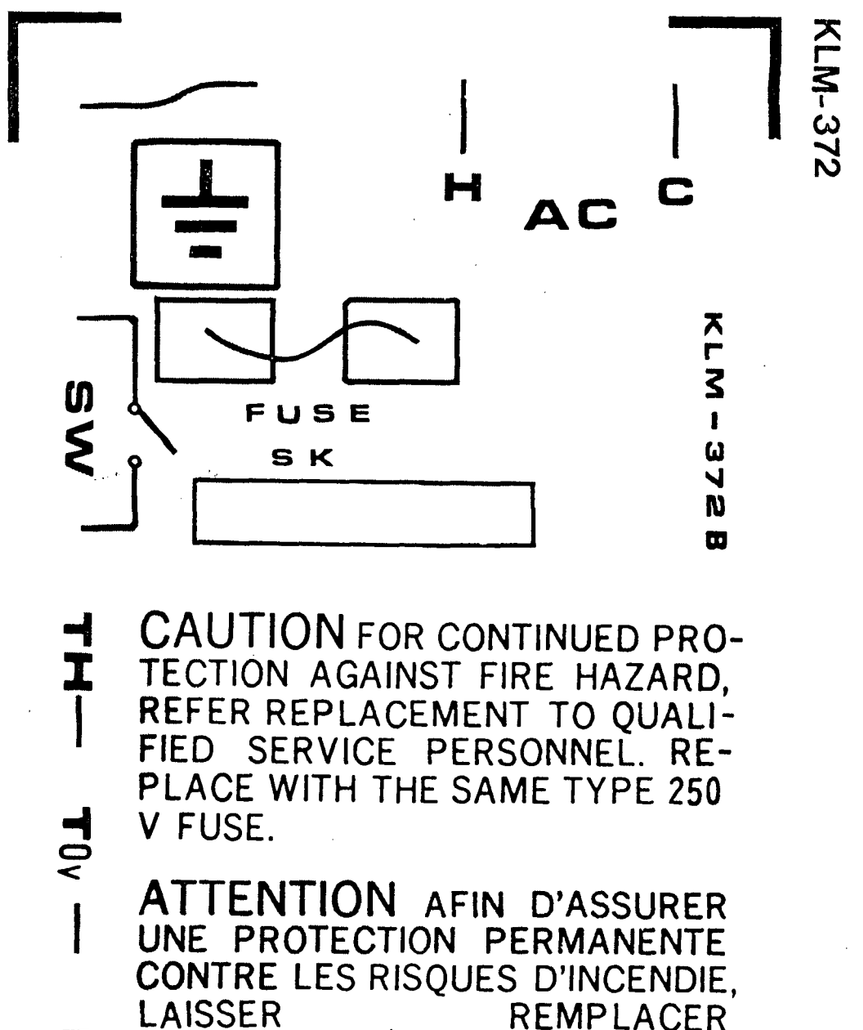
KLM-372
H
AC
C
SW
FUSE
SK
KLM-372B
TH
TOv
N
CAUTION FOR CONTINUED PROTECTION AGAINST FIRE HAZARD, REFER REPLACEMENT TO QUALIFIED SERVICE PERSONNEL. REPLACE WITH THE SAME TYPE 250 V FUSE.
ATTENTION AFIN D'ASSURER UNE PROTECTION PERMANENTE CONTRE LES RISQUES D'INCENDIE, LAISSER REMPLACER PAR UN TECHNICIEN QUALIFIE. REMPLACER PAR UN FUSIBLE DE MEME TYPE DE 250V.

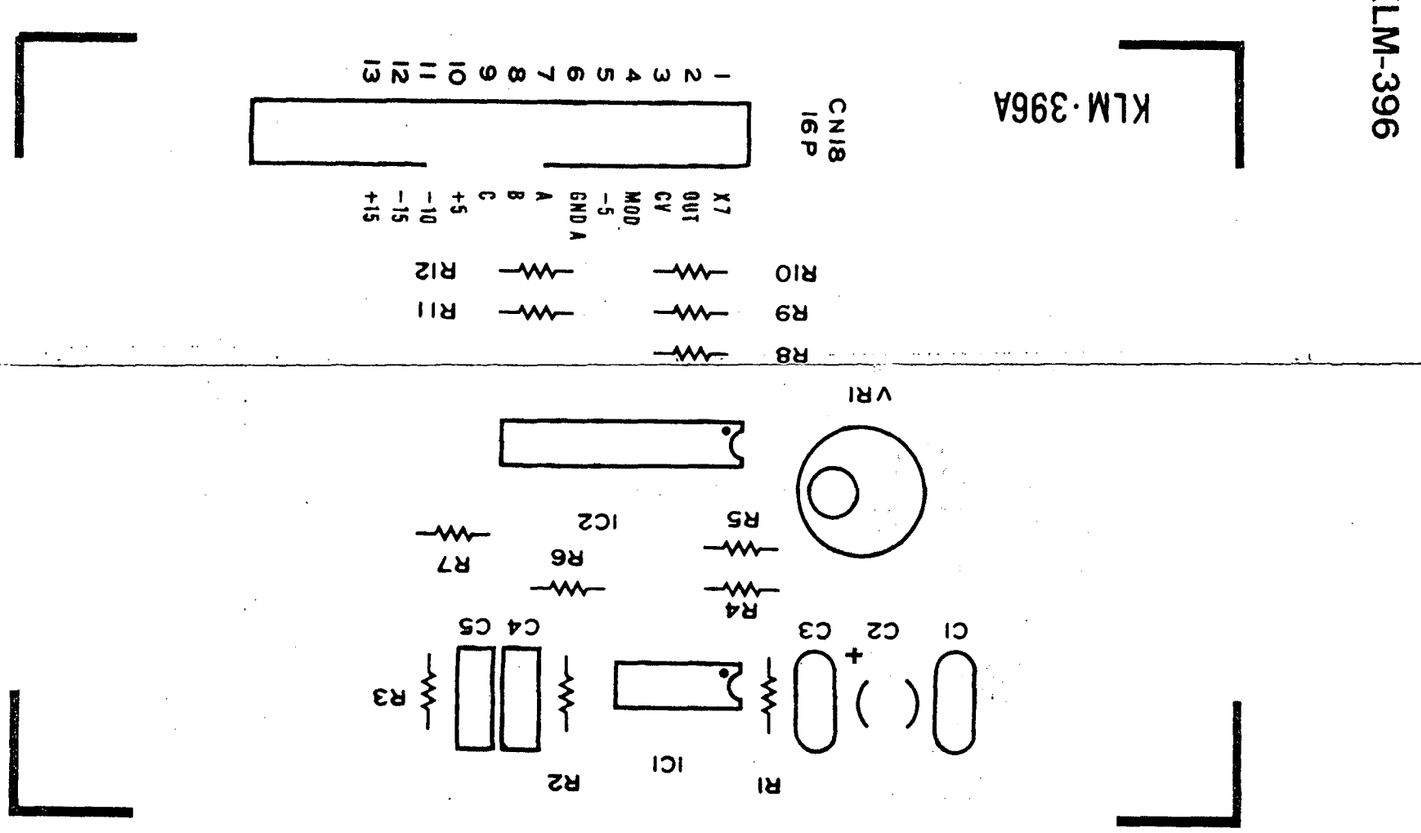
KLM-396A
KLM-396
CN18
16P
1 2 3 4 5 6 7 8 9 10 11 12 13
X7 OUT
CV
MOD
-5
GND A
B
C
+5
-10
-15
+15
R10
R9
R8
R12
R11
VR1
IC2
R5
R7
R6
R4
C1
C2
C3
C4
C5
R3
R2
IC1
R1

6. CONNECTOR FUNCTION

P.C.B.	CONNEC-TOR	FUNCTION	P.C.B.	TO CONNEC-TOR	COL-OR
KLM-366	01- 1	+15	KLM-376	01- 1	BR
	2	+5	"	2	"
	3	GND	"	3	"
	4	-5	"	4	"
	5	-15	"	5	"
	6	GNDA	"	6	"
	7	+5A	"	7	"
KLM-366	04- 1	P17	KEY-		YE
	2	P16	BOARD		"
	3	P15	"		"
	4	P14	"		"
	5	P13	"		"
	6	P12	"		"
	7	P11	"		"
	8	P10	"		"
	9	DB0	"		"
	10	DB1	"		"
	11	DB2	"		"
	12	DB3	"		"
	13	DB4	"		"
	14	DB5	"		"
	15	DB6	"		"
	16	DB7	"		"
KLM-366	05- 1	$\overline{IR}$	KLM-367	05- 19	GR
	2	8'	"	18	"
	3	4'	"	17	"
	4	$\underline{ST}$	"	16	"
	5	$\overline{TE}$	"	15	"
	6	KBD TRACK	"	14	"
	7	VCF MOD/CUTOFF	"	13	"
	8	VCO MOD	"	12	"
	9	PW/PWM	"	11	"
	10	EG INT	"	10	"
	11	RESO	"	9	"
	12	ATTACK	"	8	"
	13	DECAY	"	7	"
	14	SUSTAIN	"	6	"
	15	RELEASE	"	5	"
	16	⌿	"	4	"
	17	SUB 1/2	"	3	"
	18	SUB OFF	"	2	"
	19	EG MODE	"	1	"
KLM-366	12- 1	ARPE	KLM-371	12- 1	BR
	2	POLY	"	2	RE
	3	UNISON	"	3	OR
	4	CHORD	"	4	YE
	5	HOLD	"	5	GR
	6	P17	"	6	BL
	7	P16	"	7	PU
	8	P15	"	8	GY
	9	P14	"	9	WH
	10	P13	"	10	BK
	11	P12	"	11	BR
	12	P11	"	12	RE
	13	P10	"	13	OR
	14	P20	"	14	YE
	15	P21	"	15	GR
	16	ACKR	"	16	BL
	17	ACKI	"	17	PU
KLM-366	14- 1	SIG OUT	KLM-368	14- 1	WH
	2	GND A	"	2	"
	3	NC	"	3	"
KLM-366	17- 1	ACKI (IN)	REAR		BR
	2	CHORD	PANEL		RE
	3	Fc MOD IN	"		OR
	4	ACKI (OUT)	"		YE
KLM-367	02- 1	+15	KLM-376	02- 1	RE
	2	+5	"	2	"
	3	GND	"	3	"
	4	-5	"	4	"
	5	+15	"	5	"
	6	GNDA	"	6	"
	7	+5A	"	7	"
KLM-367	03- 1	EFF-SP/INT	KLM-368	03- 7	OR
	2	CHO	"	6	"
	3	PHA	"	5	"
	4	ENS	"	4	"
	5	VCA MOD	"	3	"
	6	P-VOL	"	2	"
	7	RESO	"	1	"
KLM-367	05- 1	EG MODE	KLM-366	05- 19	GR
	2	SUB OFF	"	18	"
	3	SUB 1/2	"	17	"
	4	⌿	"	16	"
	5	RELEASE	"	15	"
	6	SUSTAIN	"	14	"
	7	DECAY	"	13	"
	8	ATTACK	"	12	"
	9	RESO	"	11	"
	10	EG INT	"	10	"
	11	PW/PWM	"	9	"
	12	VCO MOD/CUTOFF	"	8	"
	13	VCF MOD	"	7	"
	14	KBD TRACK	KLM-366	6	GR
	15	TE	"	5	"
	16	ST	"	4	"
	17	4'	"	3	"
	18	8'	"	2	"
	19	IR	"	1	"
KLM-367	06- 1	MOD	KLM-369	06- 1	BL
	2	LFO	"	2	"
	3	DO0	"	3	"
	4	DO1	"	4	"
	5	DO2	"	5	"
	6	DO3	"	6	"
	7	P10	"	7	"
	8	P11	"	8	"
	9	P12	"	9	"
	10	P13	"	10	"
KLM-367	08- 1	TO TAPE	REAR		BR
	2	GND	PANEL		RE
	3	FROM TAPE	"		OR
	4	GNDA	"		—
KLM-367	10- 1	DO3	KLM-371	10- 1	BR
			-2 "	2	RE
			"	3	OR
			"	4	YE
			"	5	GR
			"	6	BL
			"	7	PU
			"	8	GY
			"	9	WH
			"	10	BK
			"	11	BR
			"	12	RE
			"	13	OR
			"	14	YE
			"	15	GR
			"	16	BL
			"	17	PU
KLM-367	11- 1	GND	KLM-369		PU
	2	DATA	"	11- 1	PU
	3	A	"	2	"
	4	B	"	3	"
	5	C	"	4	"
	6	INH1	"	5	"
	7	INH2	"	6	"
KLM-368	03- 1	RESO	KLM-367	03- 7	OR
	2	P. VOL	"	6	"
	3	VCA MOD	"	5	"
	4	ENS	"	4	"
	5	PHA	"	3	"
	6	CHO	"	2	"
	7	EFF SP/INT	"	1	"
KLM-368	14- 1	SIG IN	KLM-366	14- 1	WH
	2	GNDA	"	2	"
	3	NC	"	3	"
KLM-368	15- 1	NC	KLM-369	15- 3	BK
	2	GNDA	"	2	"
	3	SIG OUT	"	1	"
KLM-368	16- 1	+15	KLM-376	16- 1	P1
	2	GND	"	2	"
	3	-15	"	3	"
KLM-369	06- 1	MOD	KLM-367	06- 1	BL
	2	LFO	"	2	"
	3	DO0	"	3	"
	4	DO1	"	4	"
	5	DO2	"	5	"
	6	DO3	"	6	"
	7	P10	"	7	"
	8	P11	"	8	"
	9	P12	"	9	"
	10	P13	"	10	"
KLM-369	07- 1	GND	REAR		BR
	2	PHONES	PANEL		RE
	3	PHONES	"		OR
	4	DATA	"		YE
	5	SIG OUT	"		GR
KLM-369	09- 1	-5	CONTROL		BR
	2	BEND	PANEL		RE
	3	+5	"		OR
	4	GND	"		YE
	5	VIB	"		GR
	6	LFO	"		BL
KLM-369			KLM-367	11- 1	PU
	11- 1	DATA	"	2	"
	2	A	"	3	"
	3	B	"	4	"
KLM-369	11- 4	C	"	5	"
	5	INH1	"	6	"
	6	INH2	"	7	"
KLM-369	13- 1	+15	KLM-376	13- 1	GY
	2	+5	"	2	"
	3	GND	"	3	"
	4	-5	"	4	"
KLM-369	13- 5	-15	KLM-376	13- 5	GY
KLM-369	15- 1	NC	KLM-368	15- 3	BK
	2	GNDA	"	2	"
	3	SIG IN	"	1	"
KLM-369	201- 1	INH-1	KLM-370	201- 1	
	2	DATA	"	2	
	3	A	"	3	
	4	B	"	4	
	5	C	"	5	
	6	GND	"	6	
	7	-5	"	7	
	8	+5	"	8	
	9	P10	"	9	
	10	P11	"	10	
	11	P12	"	11	
	12	P13	"	12	
	13	DO3	"	13	
	14	DO2	"	14	
	15	KBD-TRACK	"	15	
KLM-370	201- 1	INH-1	KLM-369	201- 1	
	2	DATA	"	2	
	3	A	"	3	
	4	B	"	4	
	5	C	"	5	
	6	GND	"	6	
	7	-5	"	7	
	8	+5	"	8	
	9	P10	"	9	
	10	P11	"	10	
	11	P12	"	11	
	12	P13	"	12	
	13	DO3	"	13	
	14	DO2	"	14	
	15	KBD TRACK	"	15	
KLM-371	10- 1	DO3	KLM-367	10- 1	BR
	2	DO2	"	2	RE
	3	DO1	"	3	OR
	4	DO0	"	4	YE
	5	P13	"	5	GR
	6	P12	"	6	BL
	7	P11	"	7	PU
	8	P10	"	8	GY
	9	DO4	"	9	WH
	10	DO5	"	10	BK
	11	DO6	"	11	BR
	12	DO7	"	12	RE
	13	P26	"	13	OR
	14	P27	"	14	YE
	15	+5	"	15	GR
	16	GND	"	16	BL
	17	TE	"	17	PU
KLM-371	12- 1	ARPE	KLM-366	12- 1	BR
	2	POLY	"	2	RE
	3	UNISON	"	3	OR
	4	CHORD	"	4	YE
	5	HOLD	"	5	GR
	6	P17	"	6	BL
	7	P16	"	7	PU
	8	P15	"	8	GY
	9	P14	"	9	WH
	10	P13	"	10	BK
	11	P12	"	11	BR
	12	P11	"	12	RE
	13	P10	"	13	OR
	14	P20	"	14	YE
	15	P21	"	15	GR
	16	ACKR	"	16	BL
	17	ACKI	"	17	PU
KLM-371	J3 1	+5	KLM-371	J3 1	
	2	GND	"	2	
	3	ARP	"	3	
	4	POL	"	4	
	5	UN1	"	5	
	6	CH	"	6	
	7	HO	"	7	
	8	P17	"	8	
	9	P14	"	9	
	10	P12	"	10	
	11	P11	"	11	
	12	P10	"	12	
	13	P20	"	13	
KLM-371	J35 1	DO7	KLM-371	J35 1	
	2	P12	-3 "	2	
	3	+5	"	3	
	4	GND	"	4	
	5	TE	"	5	
KLM-376	01- 1	+15	KLM-366	01- 1	BR
	2	+5	"	2	"
	3	GND	"	3	"
	4	-5	"	4	"
KLM-376	01- 5	-15	KLM-366	01- 5	BR
	6	GNDA	"	6	"
	7	+5	"	7	"
KLM-376	02- 1	+15	KLM-367	02- 1	RE
	2	+5	"	2	"
	3	GND	"	3	"
	4	-5	"	4	"
	5	-15	"	5	"
	6	GNDA	"	6	"
	7	+5	"	7	"
KLM-376	13- 1	+15	KLM-369	13- 1	GY
	2	+5	"	2	"
	3	GND	"	3	"
	4	-5	"	4	"
	5	-15	"	5	"
KLM-376	16- 1	+15	KLM-368	16- 1	BK
	2	GND	"	2	"
	3	-15	"	3	"

NOTE

BROWN →	BN	PURPLE →	PU
RED →	RD	GRAY →	GY
ORANGE →	OR	WHITE →	WT
YELLOW →	YE	BLACK →	BL
GREEN →	GR	PINK →	PK
BLUE →	BU	LIGHT BLUE →	LB

7. SEMI-FIXED RESISTORS DIAGRAM

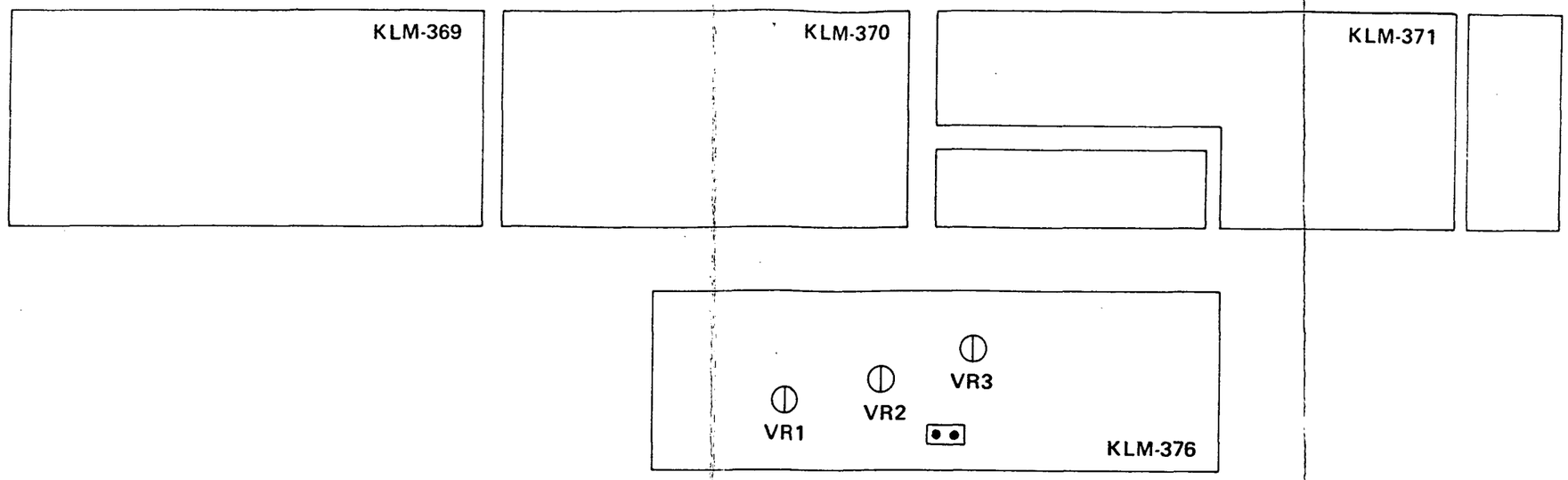

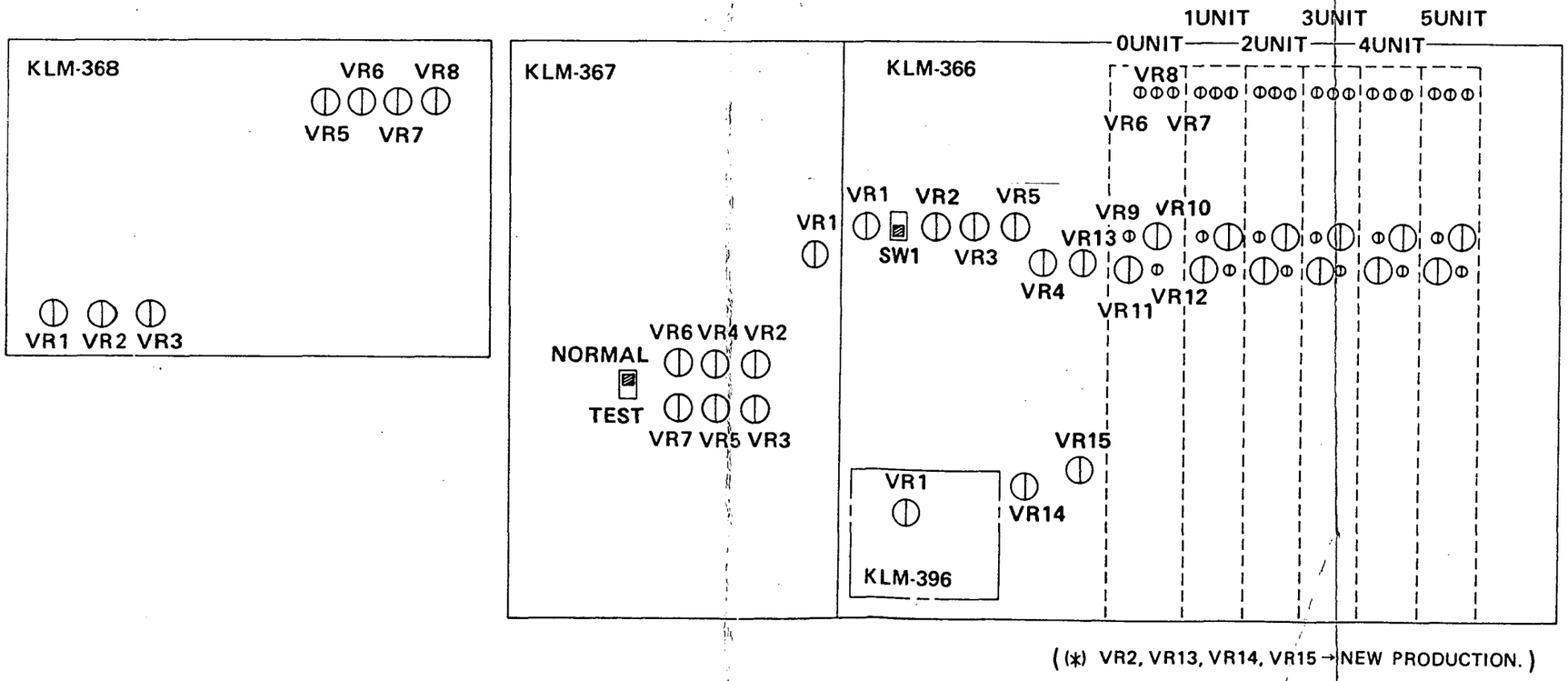

(✱) VR2, VR13, VR14, VR15 → NEW PRODUCTION.)

8. ADJUSTMENT PROCEDURE

Caution: This unit has been precisely adjusted at the factory before shipment. Therefore, absolutely do not turn any of the variable resistors other than those required for servicing. Testing and adjustment should be performed only after allowing the unit to warm up for ten minutes. Variable resistor locations are marked on separate charts.

* The following are required for the test procedures:
- Digital voltmeter (DVM) 4-1/2 digit
- Oscilloscope
- Tuner Korg WT-12, etc.
- Audio amp and speaker, or headphones.

1. Please check the following before proceeding.

1) Check all connections to make sure they are correct and secure.
2) Check memory back-up battery voltage. KLM-367 circuit board battery voltage should be 3.60V~4.10V.

2. Power supply check and adjustment (KLM-376).

Use a DVM to check the following test point (TP) voltages. (Obtain ground in front of LED.):

1) +15V for TP-J7. Adjust VR3 to obtain +15.000V ±50mV.
2) -15V for the right side of TP-R18. Confirm -15.000 mV ±300mV.
3) +5V for TP-J2. Adjust VR2 to obtain +5,000 ±10mV.
4) -5V for TP-J1. Adjust VR1 to obtain -5.000V ±10mV.

---

3. KLM-367 check and adjustment.

(1) Reset circuit.

With controls at the normal setting (fig. 1), connect a dummy 56kohm 2P (2-pin) connector to the KLM-376 2P plug (male). If connector not available attach 56K resister with small test clips (E-Z-Hook or Similar)

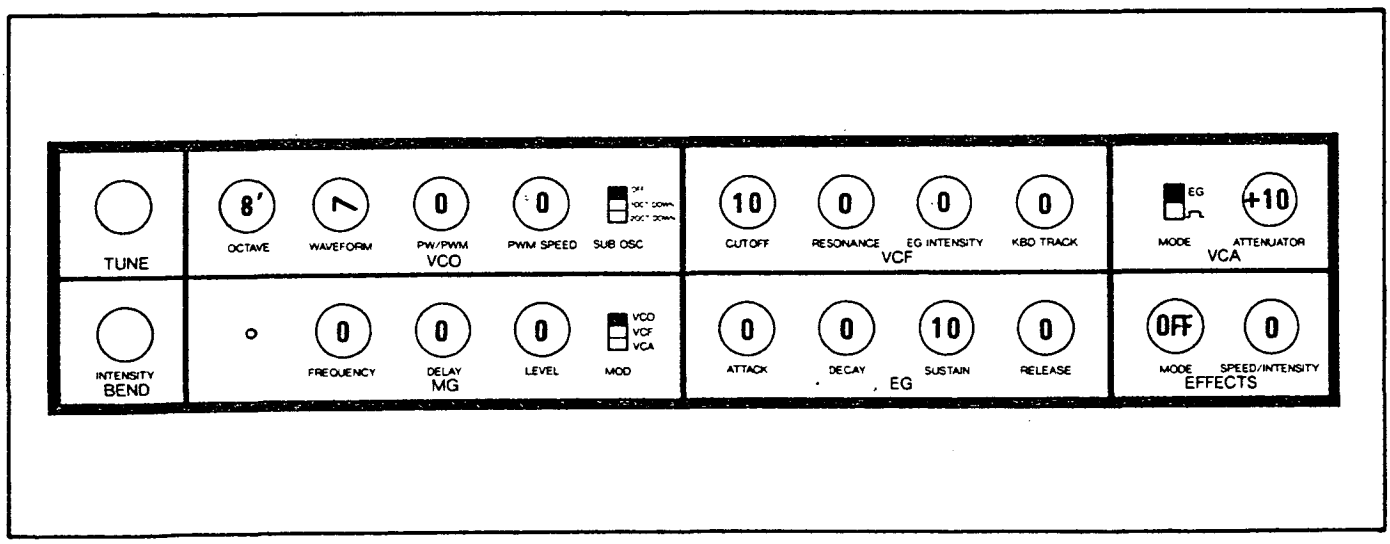

Fig. 1 Normal setting.

1) Turning VR1 from the counterclockwise position towards the clockwise direction, adjust so that the BANK A~D, MANUAL, TAPE ENABLE, and PROGRAM 1 ~ 8 LEDs all light up (instead of only BANK A and PROGRAM 1).
2) Confirm that only the BANK A and PROGRAM 1 LEDs light up when you remove the 56kohm 2P connector.

(2) D/A adjustment.

1) Set MANUAL to ON, CUTOFF to 10, and EFFECT INTENSITY to 0.
2) Set circuit board SW1 to TEST position.
3) Confirm that PROGRAM LEDs 1 & 8 alone light up when the TAPE SW is switched back and forth from DISABLE to ENABLE and back to DISABLE.
4) If LEDs other than 1 and 8 light up, adjust VR6 (offset) and VR7 (width) so that only 1 & 8 light up.
5) Turning VR7 clockwise, adjust so that the lit LEDs shift to 1 & 8. In the shift from 2 & 7 to 1 & 8 there may be some time lag between the two. If this is very large, adjust VR6 to minimize it.

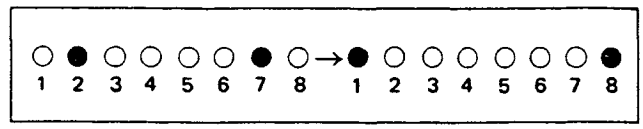

6) Switch the circuit board SW1 to the NORMAL position. Confirm that LEDs 1 & 8 remain lit up without any change.
7) Confirm that output DC click noise is within 6Vp-p when power is switched off.
8) Turn power on and confirm that the BANK A and PROGRAM 1 LEDs light up.

(3) MG adjustment.
Leaving other controls at the normal setting, set MG FREQUENCY to 10, LEVEL to 10, and MOD SW to VCA.
1) Observe connector CN03-5 on oscilloscope.

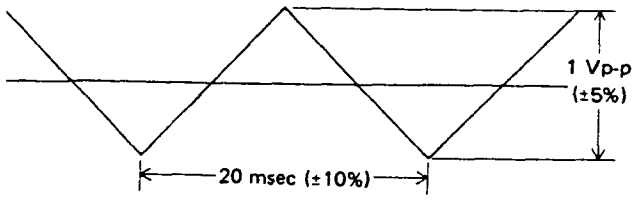

Fig. 2.

2) Adjust VR2 to obtain 1Vp-p(±5%) level; adjust VR5 to obtain frequency of 50Hz (20msec ±10%). If these values cannot be obtained after replacing IC LM13600, adjust R78 and R52 respectively.
3) Leave the other controls at the same settings as above, but change MG FREQUENCY to 0. Confirm a cycle of 10 ~ 40 sec.
Leave other controls at same settings but change MG FREQUENCY to 4, and DELAY to 10. Confirm that the waveform appears 8 ~ 12 seconds after a key is depressed.

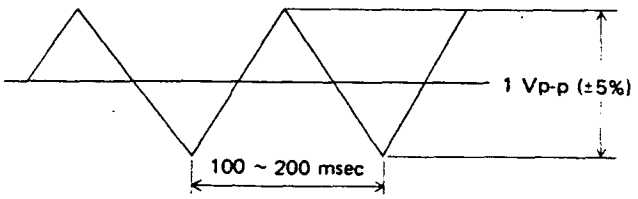

Fig. 3. (LEVEL 1Vp-p; frequency about 10Hz.)

(4) PW/PWM check and adjustment.
Set waveform to PW and PWM SPEED to 0, and PW/PWM to 10.
1) Connect oscilloscope and DVM to CN05-11.
2) Adjust VR3 to obtain +2.2V (±1%).
3) Change WAVEFORM to PWM and PWM SPEED to 10. Adjust VR4 to obtain a frequency of 20Hz.
Use resistor inseries with VR4 if adjustment cannot be obtained in the same way as for the MG.

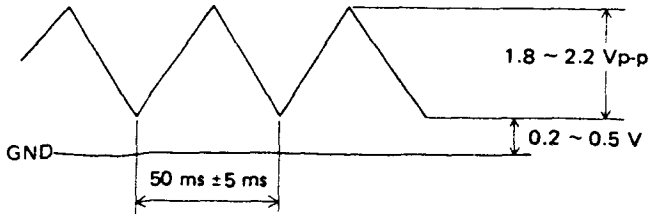

Fig. 4.

4) At this time confirm that there is a DC component of +0.2 ~ +0.5V.

4. KLM-366 check and adjustment. Obtain ground at TP5.
(1) VCF offset adjustment.
Leaving other controls at standard settings, set WAVEFORM to PW and PW/PWM to 10.
1) Use oscilloscope or DVM to check Q5 (2SC945) collector.
2) Adjust VR7 to obtain 0mV ±2mV.
3) Repeat steps 1 & 2 for units No. 0 ~ No. 5.
(2) VCA level adjustment.
Set OCTAVE to 4; leave others at normal setting.
1) Connect oscilloscope to SIG OUT (TP-1).
2) Play C3 and adjust VR9 to obtain a sawtooth waveform amplitude of 1Vp-p (±5%).
3) Repeat for units No. 0 ~ No. 5.
(3) VCF RESONANCE adjustment.
Set OCTAVE to 8, WAVEFORM to PW, and PW/PWM to 10. Check CN05-7 with DVM and adjust to obtain 0.000V ±20mV.
Check CN05-11 with DVM and adjust RESONANCE VR to obtain 8.000V ±20mV.
Leave other controls at normal setting.
1) Check SIG OUT (TP1) with oscilloscope and frequency counter.
2) Play any single key and adjust VR6 so that the VCF waveform amplitude is 300mVp-p ±20mV.
3) Repeat for units No. 0 ~ No. 5.
(4) VCF *fo* adjustment.
Set RESONANCE to 10; leave others at same setting as above (3).
1) Check oscillation frequency with frequency counter and tuner (WT-12, properly calibrated, chromatic dial set to C).
2) Adjust VR8 to obtain *fo*=523Hz (±10 cent).
3) Repeat for units No. 0 ~ No. 5.
4) Turn CUTOFF from 0 to 10 and check to see that each unit's oscillation frequency is 10 ~ 25Hz at 0 and 19 ~ 24kHz at 10; amplitude should be at least 300mVp-p throughout.
(5) EG INTENSITY adjustment.
Set WAVEFORM to PW, PW/PWM to 10, CUTOFF to 0, RESONANCE to 10, EG INT to +5. Leave others at normal setting.
1) Check SIG OUT (TP-1) with oscilloscope and frequency counter.
2) Play any single key and adjust VR4 to obtain an oscillation frequency of 5kHz (±500Hz) for units No. 0 ~ No. 5.
3) Set EG INT to +3 and check to see that there is no wide variation in pitch between units No. 0 ~ No. 5.
4) Set octave to 4', RESONANCE to 0, EG INT to +5, SUSTAIN to 0, DECAY to 5. Leave others at same setting as 3) above.
Check to see that there is no click noise for units No. 0 ~ No. 5.
(6) KBD TRACK adjustment.
Set OCTAVE to 16', connect DVM to CN05-6, and adjust KBD TRACK VR to obtain +1.6V.

Leave others at same setting as (4).

1) C1 ~ C2 should sound approximately like a scale.
2) Adjust VR5 if necessary.

(7) PITCH check and adjustment.

Set OCTAVE to 4'; leave others at normal.

1) Change circuit board slide switch to opposite position. (away from VR1)
2) Play C6 and adjust VR11 to obtain Ocent.
3) Repeat step 2) for units No. 0 ~ No. 5.
4) Play C2 and adjust KLM-396 VR1 to obtain 0 cent. Do this for one unit.
5) Set OCTAVE to 16', play C2 and adjust VR10 to obtain 0 cent.
6) Repeat step 5) for each unit. (VR3 is used to adjust for deviation of all units.)
7) Play C1, C2, C3, C4, C5, and C6, and confirm that each unit's deviation is within specifications. (Refer to Poly-6 deviation standards.)

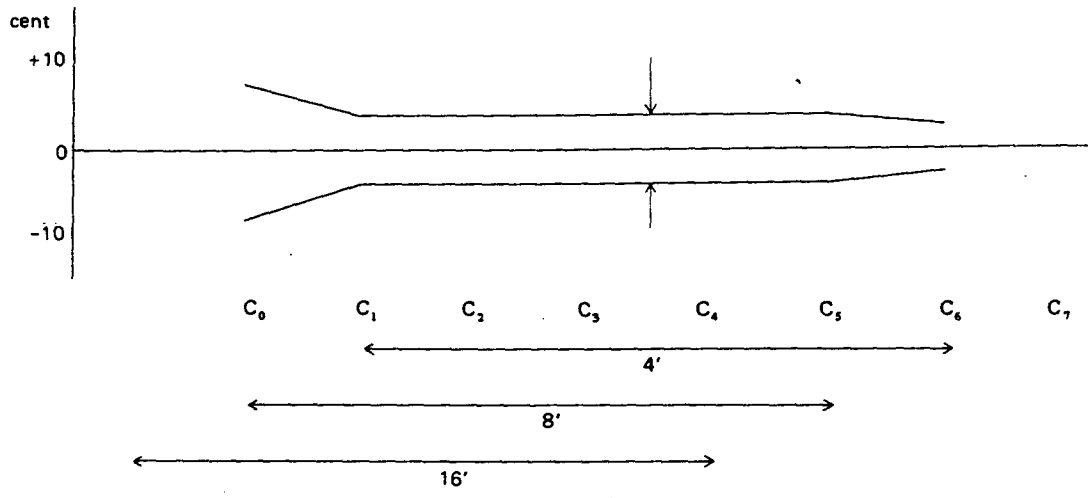

PS-6 VCO adjacent octave deviation standards at the final inspection at our factory

8) Check to confirm that deviation between adjacent octaves is within specifications. (for unit 0 only.) (Refer to VCO adjacent octave deviation standards.)

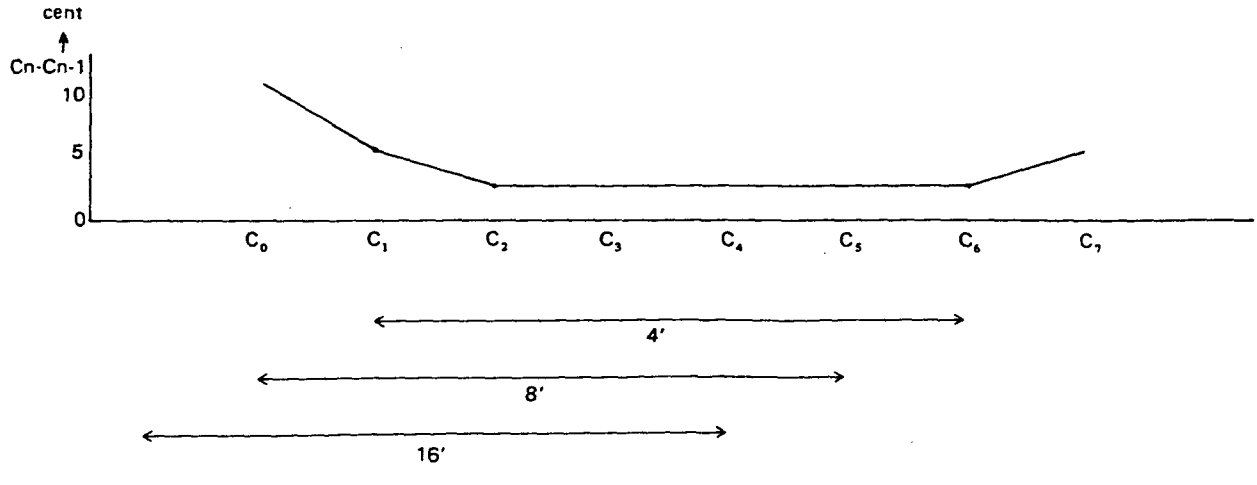

PS-6 VCO octave deviation standards at the final inspection at our factory

9) Confirm that difference between 4' D#4 and E4 is within 2 cents.
(Switch between POLY and UNISON and check unit 0 only.)
10) Switch SW1 to the front while playing C6 (stretch tuning) and confirm +8 ~ +12 cent.
11) Confirm difference of no more than 2 cents between 4' G5 and G#5. Unit 0 only is OK.
12) Confirm that KLM-366'S VR1 is approximately in the center position and not turned in the clockwise or counterclockwise directions.

(8) EG TIME check and adjustment.

1) Attack time adjustment.
Check CN05-12 with DVM and adjust ATTACK VR to obtain +0.9V ±20mV. Set SUSTAIN to 0; leave others at normal setting.
2) Test top side of R143 10K with oscilloscope. (Set sweep mode to normal.)
3) Set ARPEGGIO to ON, ARPEGGIO SPEED to 2.5, LATCH to ON, and UNISON to ON.
4. Play any single key and adjust VR12 to obtain an attack time of 250msec ±10msec. See fig. 5.

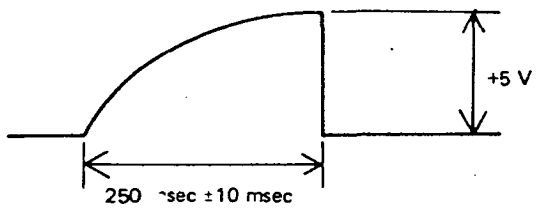

Fig. 5

5) Repeat steps 2) ~ 4) for units 0 ~ 5.
6) Set ATTACK to 10; leave others at setting 1).
Repeatedly play a single key and confirm that differences between the fade-out of the six notes are within 5 seconds and that all fade out within 15 ~ 25 seconds.
7) DECAY TIME check.
Set OCTAVE to 4', WAVEFORM to PW, PW/PWM to 10, CUTOFF to 2, RESONANCE to 10, EG INTENSITY to +3, DECAY to 8, SUSTAIN to 0, ARPEGGIO to ON, ARPEGGIO SPEED to 1 ~ 3, LATCH to ON, and KEY ASSIGN MODE to POLY. Leave others at normal.
Listen to each unit and check to see that there are no deviations.
8) RELEASE TIME check.
Set DECAY to 0, SUSTAIN to 10, and RELEASE to 8; leave others at same as 7) above.
Listen to each unit and check to see that there are no deviations.

5. KLM-368 check and adjustment.

(1) HEADPHONE AMP OFFSET adjustment.

1) Use normal setting. Connect oscilloscope and DVM to TP-4 (GND is TP-6). Adjust VR6 to obtain offset of 0mV ±20mV.

(2) HEADPHONE AMP LEVEL adjustment.

Set OCTAVE to 4'; leave others at normal. Check point is same as (1) above.
1) Play C3 and adjust VR5 to obtain a sawtooth waveform amplitude of 0.3Vp-p (±5%).
2) Check to be sure there is no waveform distortion at this point.

(3) OUTPUT AMP OFFSET adjustment.

Set WAVEFORM to PW, PW/PWM to 10, MG FREQUENCY to 7, LEVEL to 10, and MOD to VCA.
Check SIG OUT (TP-5) with oscilloscope.
1) Adjust VR7 to minimize waveform amplitude. See fig. 6.

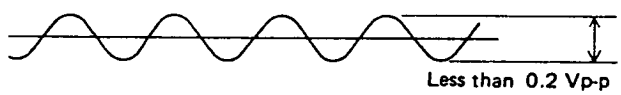

Fig. 6

(4) OUTPUT AMP LEVEL adjustment.

Set OCTAVE to 4'; leave others at normal.
1) Play C3 and adjust VR8 to obtain a sawtooth waveform amplitude of 3Vp-p (±5%).
2) Confirm that click noise occuring when power is turned off is less than volume of sound made by playing C3. DC click noise amplitude should be no greater than 6Vp-p.

(5) BBD CLOCK adjustment.

Set EFFECTS MODE to ENSEMBLE, SPEED/INTENSITY to 10. Leave others at normal.
1) Check TP-1 with oscilloscope.
2) Adjust VR1 to obtain maximum clock cycle of 30μsec. See fig. 7.

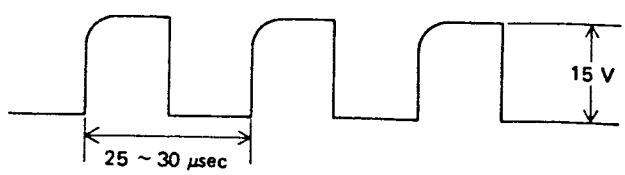

Fig. 7

3) Check TP-2 with oscilloscope.
4) Adjust VR2 to obtain maximum clock cycle of 30μsec.
5) Check TP-3 with oscilloscope.
6) Adjust VR3 to obtain maximum clock cycle of 30μsec.

7) Set INTENSITY to 0 and check TP-3 with oscilloscope.
Set EFFECT to ENSEMBLE and confirm that the minimum ENSEMBLE clock time is 4 ~ 8μsec.
Set EFFECT to PHASE and confirm that maximum PHASE clock cycle is 8 ~ 12μsec, and minimum is 1.5 ~ 3μsec.

8) Set INT to 10 and confirm that maximum PHASE clock cycle is 2.5 ~ 3.5μsec, and minimum is 1.0 ~ 2.0μsec.

9) SET INT to 0 after completing the above.

10) Set EFFECT to CHORUS and confirm maximum clock cycle of 16 ~ 22μsec., and minimum of 8 ~ 12μsec.

(6) EFFECT WAVEFORM check.

Use normal setting and check TP-5 with oscilloscope (1V, 2msec.) Play C1 and check the various waveforms while switching from one EFFECT MODE to another.

1) EFFECT MODE at OFF.

2) EFFECT MODE at CHORUS.

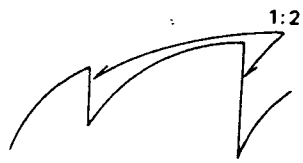

3) EFFECT MODE at PHASE.

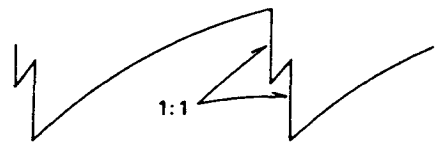

4) EFFECT MODE at ENSEMBLE.

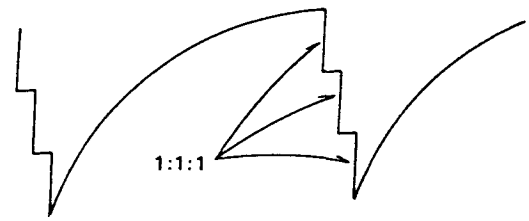

Note: Note that the CHORUS waveform is not as full as the PHASE or ENSEMBLE waveforms.

Fig. 8

Sales Support +
Product Mgr

9. PARTS LIST

PARTS NAME SPECIFICATIONS		PART CODE	Q'TY
CARBON RESISTORS (Not listed)			
SOLID RESISTORS			
1/4 KY	10M	11013810	5
	22M	11013822	1
BLOCK RESISTORS			
RKC1/8	B5J 10K	13435100	1
	B8J 10K	13635100	3
METAL FILM RESISTORS			
1/4FYLC	100Ω	12313100	1
	102	12313102	2
	243	12313243	1
	249	12313249	1
	324	12313324	1
	464	12313464	1
	499	12313499	1
	1.00K	12314100	10
	1.87	12314187	1
	2.00	12314200	1
	2.15	12314215	1
	3.16	12314316	5
	3.24	12314324	1
	4.53	12314453	1
	4.87	12314487	1
	10.0	12315100	10
	10.7	12315107	1
	11.3	12315113	1
	12.1	12315121	1
	12.7	12315127	1
	15.0	12315150	5
	17.4	12315174	1
	20.5	12315205	1
	21.5	12315215	1
	30.1	12315301	1
	36.5	12315365	1
	43.2	12315432	6
	49.9	12315499	3
	61.9	12315619	1
	66.5	12315665	1
	100 K	12316100	8
	301	12316301	2
	24.0	12315240	1
	27.0	12315270	6
	37.4	12315374	1
	68.0	12315680	1
	34.8	12315348	1
	523	12316523	
1/8 BY	100 K	12066100	6
	200	12066200	8
SEMI-FIXED RESISTORS			
10φ B	220 Ω (R)	35201122	3
	470	35201147	2
	2.2	35201222	6
	3.3	35201233	1
	4.7	35201247	1
	10	35201310	1
	15	35201315	1
	22	35201322	1
	47	35201347	1
	100	35201410	16
	15 SOLID	35001315	6
	100	35001410	18
	1MΩ	35001510	6

PARTS NAME SPECIFICATIONS		PART CODE	Q'TY
MYLAR CAPACITORS			
50V	0.001 μFK	20003410	4
	0.0012	20003412	8
	0.0022	20003422	4
	0.0033	20003433	1
	0.0047	20003447	2
	0.01	20003510	27
	0.022	20003522	3
	0.033	20003533	2
	0.047	20003547	45
	0.015	20003515	1
	0.1	20003610	2
	0.15	20003615	3
	0.0068 μFJ	20002468	18
CERAMIC CAPACITORS			
50V	10 PF D	21253210	3
	22 J	21256222	4
	33	21256233	4
	100	21256310	5
	470	21256347	10
	560	21256356	6
	680 K	21277368	8
	0.01μF Z	21289510	52
25V	0.1 μF M	21238610	2
POLYPROPYLENE CAPACITORS			
PPC 100V 6200PF		26000462	6
ELECTROLYTIC CAPACITORS			
50V	1 μF	23515110	11
	2.2	23515122	1
	3.3	23515133	4
25V	10	23511210	2
16V	10	23507210	46
	22	23507222	6
	47	23507247	2
	100	23507310	6
35V	2200	23613422	1
	4700	23613447	1
50V	0.33 MS	23315033	1
	2.2 "	23315122	2
16V	10 "	23307210	1
50V	1.5 "	23315115	1
POTENTIOMETERS			
EVH-5LA 802 B14		36005800	16
EVH-6LA 802 B14		36010800	1
EVH-5LA 802 C16		36007400	1
K1611 16KC		36014200	1
K1611008TE 10KB		36014000	1
ROTARY SW			
SRM-1033141		37002300	2
1034362		37001500	1
101B		37002600	1
TACT SW			
KHC-11901		37503400	19
SLIDE SW			
SSB-122019		37301000	4
12300		37303500	5
12202		37301200	2
SSS-322		37303400	2
1801-0121		37501600	1

PARTS NAME SPECIFICATIONS	PART CODE	Q'TY
IC		
HD14011BP	32004008	4
14013	32004009	3
14024	32004011	1
14027	32004025	6
14042	32004013	6
14051	32004017	10
14066	32004004	5
14069UBP	32004019	4
14070B	32004003	1
14174	32004020	1
14175	32004026	2
SN74LS04	32021028	1
74LS08	32021029	2
74LS75	32021030	4
LM13600N	32022006	4
13600N. SELECTED (RED)	32022091	1
324N	32021008	3
339C	32021027	1
MPC393C	32001027	5
NJM4560	32009006	4
4556	32009002	1
4558DV	32009001	27
TL071	32021013	1
072	32021011	10
μPD8048-345	32001037	1
8049-C217	32001036	1
TC-5514 APL-3	32003006	1
MC1408L8	32020023	1
MN3004	32002006	3
NE571	32025002	2
555	32021012	1
M5230L	32011001	1
SSM2044	32029004	6
2056	32029006	6
TRANSISTORS		
2SA733AK	30000727	15
2SA798G	30001007	4
2SB744AP	30100328	2
2SD794AP	30300528	2
2SC945AK	30200327	33
2SC945AK or P SELECTED	30200399	12
2SC1583 or F	30201106	4
FET		
2SK30A TM-GR	30600232	1
2SK30A TM-O	30600115	11
DIODES		
1S 1555	31000100	123
1S 1885	31000200	4
ZENER DIODES		
02BZ3.9A	31102000	1
LED		
PR3932S (φ3)	31201400	3
LT8001P	31201500	7
PHOTO COUPLERS		
HTV P-1501	33000800	1
CRYSTAL OSCILLATOR		
EFO-A6R0M01 (6 MHz)	33500900	2

PARTS NAME SPECIFICATIONS	PART CODE	Q'TY
THERMISTORS		
TD5-A110DA (100 Ω)	18032310	3
A150DA (500 Ω)	18032350	1
TD5-C210DA (1K)	18032410	1
C250DA (5K)	18032450	1
PHONEJACK		
STREO 0927#02	45300400	1
2P 0922#01	45300600	3
3P 0902#01	45300500	2
2P 0983#00	45300800	1
BATTERY		
150MAH 3.6V	52000900	1
PCB		
KLM-366	34036600	1
367	34036700	1
368	34036800	1
369	34036900	1
370	34037000	1
371	34037100	1
372	34037200	1
376	34037600	1
POWER TRANSFORMER		
TA-001 100V, 117V	40006200	1
TB-001 220V, 240V	40006300	1
FUSE HOLDER		
S-N5053	51501600	6
SPARK KILLER		
PME-271M533	21900300	1
NOISE FILTER		
TDK NOISE FILTER	12800100	1
WOODEN CASE		
KOC-D10005	64507900	1
FRONT PANEL		
KOC-C20111	64053500	1
METAL FITTING OF KLM-369		
KOC-C40399	64053600	2
METAL FITTING OF KLM-371		
KOC-C30179 2	64053800	1
KOC-C30179 1	64053700	1
PHONE JACK PLATE		
KOC-C30178	64054000	1
POWER PLATE		
KOC-C40397	64053400	1
RADIATION BOARD		
KOC-C40406	56001800	1
METAL FITTING OF KLM-376		
KOC-C40405	64053200	1
CONTROL PANEL		
KOC-E20028	64607900	1
CONTROL WHELL		
KOC-E40091	64608000	2

PARTS NAME SPECIFICATIONS	PART CODE	Q'TY
PCB RAIL		
	64608200	1
MODEL NUMBER PLATE		
KOC-C40144	64050500	1
KEY BOARD		
ESK-701 61 KEYS	42001900	1

NOTE

This is the modification in circuit. Please make necessary treatment for unmodified sets.

(1) Please fix yellow KBD wires to KBD chasis with cord keeper in order to keep the wires away from IC33 on PC-Board KLM-367. This modification prevents wrong operation of the programmer.

(2) Connect the GND side of the battery on P.C.-board KLM-367 to GND No. R2, R3 and R4 on P.C.-board KLM-370.

(3) CONNECT the GND of PHONE JACKS to shield sheet under KLM-368.

(4) Modifucation to improve the higher frequency response has been made on KLM-368 in order to improve the tone quality from the June production. The circuit diagram in this manual fits for the modification.
Constants for the old production are as follows:

R167	2.2KΩ	R166	1KΩ
R197	10 KΩ	C78	0.0047μ
R196	100 KΩ		

OUTPUT AND LEVEL adjustment
Same setting as P23 (4).
Play C3 and adjust VR8 to obtain a sawtooth waveform, amplitude of 2.0Vp-p (±5%).

(5) The circuit diagram and the P-C Board for KLM-366 have been modified from the June production. Accordingly, adjustment procedure for KLM-366 has been changed as follows:

1) VCF for adjustment (Change in R58 and R64)
Turn CUTOFF from 0 to 10 and check to see that each unit's oscillation frequency is 6.5~20 Hz at 0 and 25~31 KHz at 10. Amplitude should be at least 300mVp-p throughout.

2) KBD TRACK offset adjustment
Same setting as p20(6)
Play C1 and turn the KBD TRACK knob from 0 to 10. Confirm that the difference between these two pitches is within 20 cents. If not, adjust VR-13.

3) PITCH check and adjustment
VR15 on KLM-366 is equal to VR1 on KLM-396.
Confirm that difference between 4' D#4 and E4 is within 2 cents. If necessary, adjust VR14.
VR2 is used to adjust for deviation in higher pitch range totally for all the 6 units.

D. Gilm [illegible]
Astoria
Garrick Lane.
Hampton Court Rd
Hampton
Middx.
TW12 2EN.

0181 783 1656.

Phil Taylor — 0181 961 0961.
DGM Ltd. 0831 261 757.
3 Cullen Way
Park Royal
NW10 6JZ.

5-88