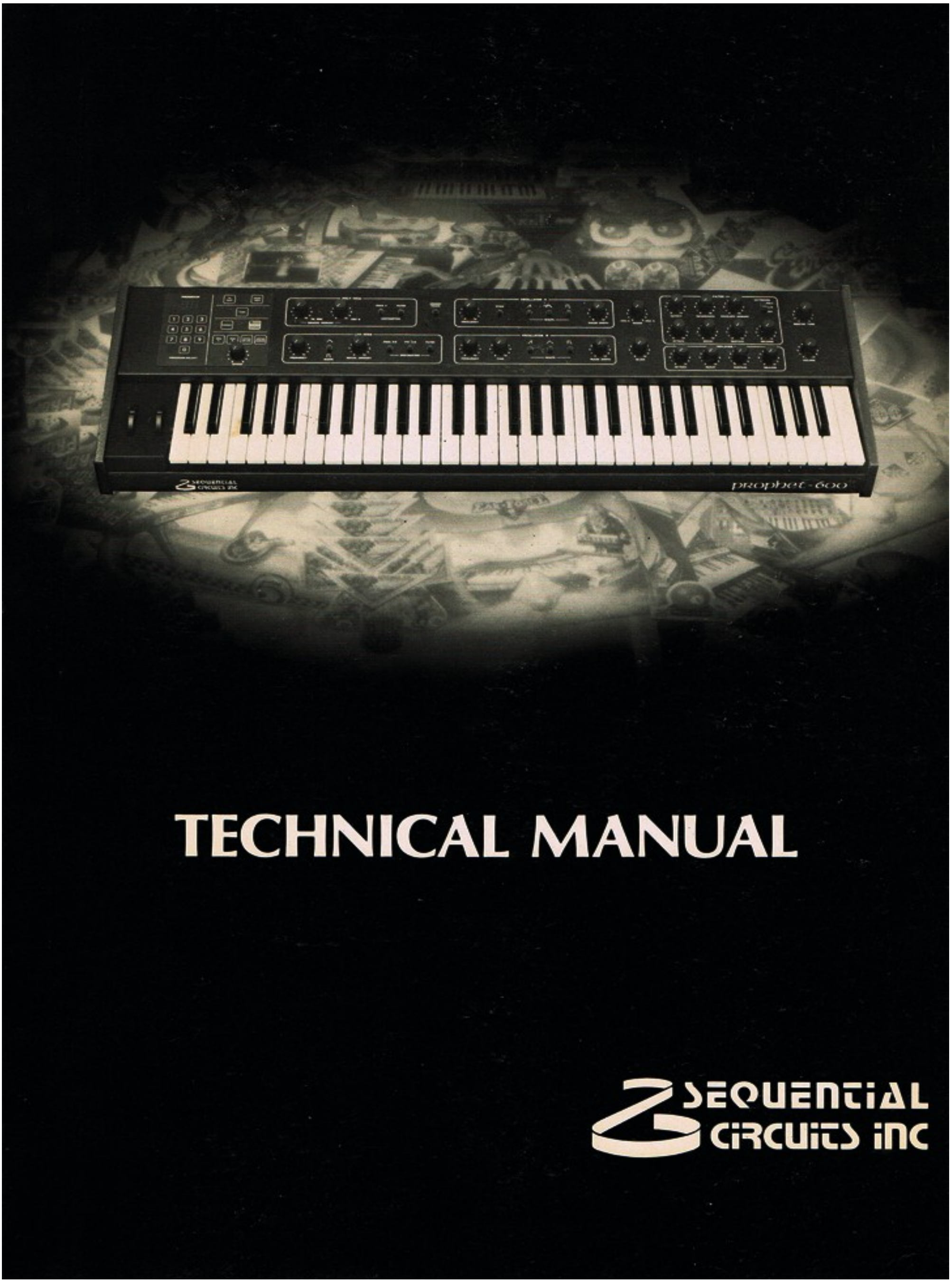
prophet-600
TECHNICAL MANUAL
SEQUENTIAL CIRCUITS INC

MODEL 600
Manual No. TM600A

PROPHET-600 SYNTHESIZER

TECHNICAL MANUAL

By Stanley Jungleib

Sequential Circuits, Inc.
Nijverheidsweg 11c
3641 RP Mijdrecht, Netherlands
02979-6211
TELEX: 12721 SQNTL NL

Sequential Circuits, Inc.
3051 North First Street
San Jose, CA 95134-2093
408/946-5240
TELEX: 364412 INTR 706

PROPHET-600 SYNTHESIZER
TECHNICAL MANUAL

By Stanley Jungleib

Manual No. TM600A
Issued: July, 1983
Supercedes: TN600-0 Preliminary Service Data
TN600-1 Power-On/Reset Modification
FB9 Field Bulletin #9 Pitch Wheel Note

Copyright © 1983 by
SEQUENTIAL CIRCUITS, INC.
All rights reserved. Printed in USA.

The contents of this manual are the property of
Sequential Circuits, Inc. and are not to be copied
or reproduced without our prior written permission.

Data sheets reprinted in Section 5 are courtesy of
Curtis Electromusic Specialties

About This Manual and Servicing the Prophet-600

Sequential Circuits issues this technical manual for use by qualified technicians in servicing its products. Except for the scaling procedure, owners should generally not attempt to service the Prophet-600. At the same time we like to give owners access to this information. This is done on condition that owners realize that any unauthorized service (including scaling) or modifications void the warranty.

This edition (TM600A) covers Prophet-600s with serial numbers 0001 through current production. Serial numbers 0001 through 0113 must be checked for the modifications described in paragraph 1-10.

For all basic operations, please refer to the Operation Manual (CM600A).

This manual is organized as follows:

SECTION 1, SERVICE contains functional tests, adjustments and other procedures.

SECTION 2, THEORY describes the design at general, block, and circuit levels.

SECTION 3, DOCUMENTS contains the interconnection diagram, schematics, and parts placement diagrams.

SECTION 4, PARTS cross-references components to SCI part numbers.

SECTION 5, DATA SHEETS contains information on selected ICs.

Table of Contents

		page
About This Manual and Servicing the Prophet-600		iii
SECTION 1	**SERVICE**	
1-0	PREPARATION	1-1
1-1	BASIC OPERATION TEST	1-3
1-2	VOICE TESTING	1-6
1-3	OSCILLATOR A	1-7
1-4	OSCILLATOR B	1-8
1-5	FILTER	1-8
1-6	AMPLIFIER	1-9
1-7	LFO-MOD	1-9
1-8	POLY-MOD	1-10
1-9	DAC GAIN	1-11
1-10	SCALING	1-11
1-11	MODIFICATION CHECK	1-13
1-12	WHEEL ALIGNMENT	1-14
SECTION 2	**THEORY**	
2-0	GENERAL	2-1
2-1	PHYSICAL ORGANIZATION	2-4
2-2	NON-VOLATILE RAM PROTECTION AND POWER DETECTION	2-5
2-3	SYSTEM CLOCK	2-6
2-4	MICROCOMPUTER	2-6
2-5	COMPUTER TROUBLESHOOTING	2-7
2-6	INTERRUPTS	2-9
2-7	MIDI	2-10
2-8	LED MATRIX	2-10
2-9	SWITCH MATRIX	2-11
2-10	SWITCH LATCHES	2-11
2-11	DAC and CV DEMULTIPLEXER	2-12
2-12	POT MULTIPLEXER and ADC	2-14
2-13	THE SYNTHESIZER	2-15
2-14	INTEGRATED FILTER/AMPLIFIER	2-16
2-15	AUDIO OUTPUT	2-17
2-16	TUNE	2-17
2-17	CASSETTE/MISC	2-19
SECTION 3	**DOCUMENTS**	
3-0	DOCUMENT LIST	3-1

SECTION 4	**PARTS**	
4-0	SYSTEM/CHASSIS	4-1
4-1	PCB 1 LEFT CONTROL PANEL	4-2
4-2	PCB 2 RIGHT CONTROL PANEL	4-3
4-3	PCB 3 COMPUTER BOARD	4-3
4-4	PCB 4 VOICE BOARD	4-5

SECTION 5 **DATA SHEETS**

CEM 3340
CEM 3360
CEM 3372

VOICE DEFEAT = (hold key) + RECORD / 7

1-0 PREPARATION

To ensure consistent performance, all instruments should be completely tested periodically and preceeding any service or repair. This will uncover related or unrelated malfunctions and provide a logical basis for troubleshooting. This section contains all procedures needed to completely test a Prophet-600. In addition, the scaling procedure and a few mechanical procedures are included. Functional tests should proceed consistently in the order given. But to accomodate real-world situations, each test is written so that it can be performed independently.

WARNING! You are responsible for the safe operation of this instrument under service conditions. Incorrect grounding practices can create lethal shocks. Scaling and other service operations must be performed with power on. Under these circumstances lethal voltage is present in the power supply primary area. Switch power off before disconnecting or connecting any circuitry, or removing or installing printed circuit boards (PCBs), integrated circuits (ICs), or other parts.

CAUTION! When operating disassembled, jumper the sleeve (ground) of the AUDIO OUT jack to the chassis.

1. Check the Prophet-600 serial number. If it is 0001 through 0113, check that the modifications described in paragraph 1-10 have been made. These modifications correct problems of memory loss and sequencer malfunctions.

2. Only if the unit is "losing programs" while operating on 50 Hz power, check that C308 (see Figure 1-4, page 1-13) is .02 uF.

3. Check the line voltage selector on the back panel and set as required.

4. Check that the fuse is correct for the selected line voltage:

110V:	1/2A, slo-blo
220V:	1/4A, slo-blo

5. For easy monitoring simply plug standard stereo headphones (600 Ohm minimum impedance) into the AUDIO OUT jack. Or if preferred, switch off power to monitor system and connect AUDIO OUT to it.

6. Connect the CASSETTE IN and OUT jacks to the recorder (see Figure 1-0).

7. Connect the footswitch to the CONTROL FOOTSWITCH jack. (If an official footswitch is not available, any normally-open switch which momentarily connects tip to sleeve will work.)

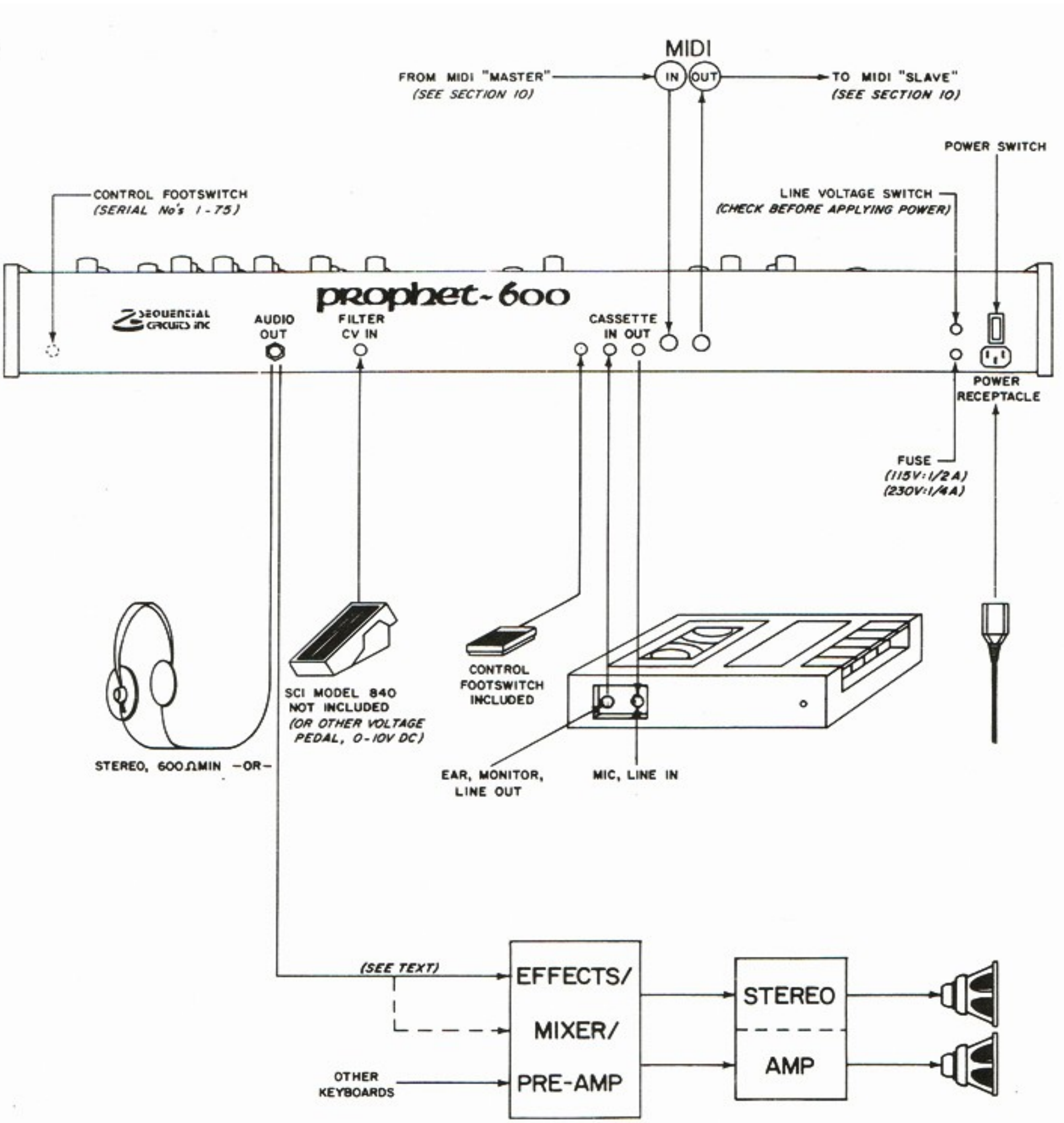

Figure 1-0
INSTALLATION

8. Connect a voltage pedal or other 0 - 10 Vdc source to the FILTER CV IN.

9. Connect MIDI cable to MIDI OUT. (This will later be temporarily connected to MIDI IN.)

10. Check that the PITCH wheel (the left wheel) is in center-detent position. (For mechanical procedures for the wheels, see the end of this section.)

11. Check that the MOD wheel (the right wheel) is fully down.

12. Center MASTER TUNE.

13. Adjust SPEED to -1½ (to the left of 0), for X1 playback.

14. Adjust VOLUME to 0.

15. Plug in Prophet-600 power cable.

16. Switch Prophet-600 power on.

17. If the Prophet-600 computer is operating normally first TUNE will light then after a few seconds PROGRAM 00 will be displayed and PRESET will be lit.

18. If no LEDs light, check or replace fuse and try again.

19. If it does not "come-up" correctly, there must be either a computer or power supply malfunction which may prevent further testing.

20. If used, switch on audio monitor system.

1-1 BASIC OPERATION TEST

1. Play a few notes and raise VOLUME to a usable level. (When using amplification instead of headphones, for best signal-to-noise ratio, VOLUME should be set as high as possible while the monitor system gain is reduced.) Check for smooth, quiet control throughout VOLUME range. Check that when VOLUME is fully counterclockwise (CCW), there is no output (bleed-through). With VOLUME as high as "2", there may be no output. This is normal.

2. If the control panel indicates normally but no sound can be heard (directly from AUDIO OUT with headphones) then look into the FINAL VCA and AUDIO OUT circuitry.

3.. If any of the following control switch (as distinguished from synthesizer switch) operations are erratic, check the connection between the membrane switch panel and PCB 1 for firm mating.

4. To test the cassette interface, save the (owner's) current programs and sequences on tape. (Of course this will be be impossible if the cassette interface is disabled by a computer malfunction.) To save programs and sequences:

a. Rewind tape to start for program file.
b. Reset tape counter (if used).

c. Press RECORD (on the Prophet).
d. Start recorder in record mode.
e. After three seconds, press TO TAPE.
f. Check that the record level is 0 dB or slightly into the red.
g. When FROM TAPE blinks, stop recorder and rewind.
h. To verify, start playback.
i. Press FROM TAPE.
j. When FROM TAPE goes out, stop the recorder. The programs have been recorded and verified.
k. Leave some space on the tape between the program file and the beginning of the sequence file.
l. If used, note tape counter setting or reset to 000 (as your prefer).
m. Press RECORD.
n. Start recorder in record mode.
o. After three seconds, press TO TAPE.
p. Press either SEQ 1 or 2 (within 3 seconds of TO TAPE).
q. When FROM TAPE blinks, stop recorder and rewind.
r. To verify, start playback.
s. Press FROM TAPE.
t. When FROM TAPE goes out, stop the recorder. The sequences have been recorded and verified.

5. If you can work with the user's programs, fine. Otherwise load the standard Factory Programs:
a. Load the Factory Program cassette and rewind to start.
b. Press RECORD (on the Prophet).
c. Start recorder in play mode.
d. Press FROM TAPE.
e. When the FROM TAPE LED goes out, stop the recorder.

6. Check that your favorite Factory Programs sound as they should. (Programs 11 through 18 are similar to the Prophet-5.) If all voices in a program seem wrong or somehow altered, suspect memory or the monophonic sample/holds. If one or occasional notes are bad, suspect a voice or one of its four sample/holds (OSC A, OSC B, FILTER, AMP).

7. To check the power on/reset circuit, randomly switch power off and on a few times. Check again that a few programs haven't been altered.

8. Play and listen to the tuning. If a Prophet-600 is claimed to be out of tune, you must first assume that the scaling procedure--which has been published in the Operation Manual--has been incorrectly performed. A poorly-scaled machine exhibits greater "beating" between voices, particularly as the PITCH wheel is rotated to its extremes. If tuning is the main service problem, allow the instrument to warm-up thoroughly (½ - 1 -hour) then perform the scaling procedure (see page 1-11). In the meantime, continue with functional testing.

9. Select programs with short envelope timings and check that every key works. Strike every key hard and fast, to try to uncover bouncing contacts. Identify any scratchy or intermittent keys by applying masking (or other low-tack) tape.

10. Test all PROGRAM SELECTs and PROGRAM display segments, by selecting programs 00, 11, 22, 33 ...99.

11. To test the EDIT indicator (between the digits), enter Edit mode by turning any synth knob (e.g. OSCILLATOR A FREQUENCY).

12. With EDIT indicated, switch RECORD on. Select test location (with an undesired program). Verify edited program is correctly recorded.

13. Switch PRESET off (Manual mode). Playing the keyboard should give a random or no sound. Switch PRESET back on.

14. Test the sequencer by loading two sequences into memory:
    a. Switch RECORD on.
    b. Select SEQ 1.
    c. Play some notes.
    d. Switch RECORD off (or hit footswitch). The sequence will loop.
    e. Switch SEQ 1 off (or hit footswitch).
    f. Switch RECORD on.
    g. Select SEQ 2.
    h. Play some notes.
    i. Switch RECORD off (or hit footswitch). The sequence will loop.
    j. Vary playback SPEED. (Edit must be activated by first turning the knob to its programmed setting.)
    k. To program speed, press RECORD (it will not light).
    l. Switch off SEQ 2 (or hit footswitch).
    m. Switch SEQ 2 back on to check that the new speed was properly programmed.
    n. Switch SEQ 2 off.

15. With two sequences loaded, the PITCH wheel center can be programmed. This is done to ensure that the pitch wheel has not been detuned by tampering. If the PITCH wheel is malfunctioning, it may need realignment before proceeding (see end of section).
    a. Check that MASTER TUNE is centered.
    b. Check that the PITCH wheel is in center detent position.
    c. Hold RECORD. It will light.
    d. Press PROGRAM SELECT 3. RECORD will go out.

16. Check that the PITCH wheel raises and lowers the pitch of all six voices by up to three semitones. Return to center.

17. Check that the MASTER TUNE knob operates smoothly over a one-semitone range. Return to center.

18. Check that the MOD wheel smoothly applies modulation. Return to minimum.

19. Switch ARPEG UP-DN on. Hold keys. Adjust SPEED. Press RECORD (it will not light). This latches the arpeggio. Release keys--it still plays. To unlatch, press RECORD (or footswitch).

20. Switch ARPEG ASSIGN on. Hold keys. Latch. Adjust SPEED to full minimum. Hit footswitch quickly. Latched arpeggio will advance when the footswitch is released. Switch ARPEG ASSIGN off.

21. Switch UNISON TRACK up. Play. All voices will be assigned to the lowest key. Switch off (down).

22. Hold a chord. Switch UNISON TRACK up. Chord will now track lowest note played. Switch off (down).

23. Vary the GLIDE knob and verify function. Leave set to 0 or select low-glide program.

24. Check that the FILTER CV IN input operates on all six voices.

25. Connect the free end of the MIDI cable to MIDI IN. (It is not necessary to switch power off.) Playing one key should produce two voices (which may actually be difficult to discern). Hold a key and while holding, disconnect the MIDI cable. Release the key. One voice should drone on. To clear this drone play six keys simultaneously.

1-2 VOICE TESTING

To test the six individual voices, throughout the following tests you must play six keys, or use the sequencer (not arpeggiator) to play them. The following keyboard fingering is recommended as a habitual way of always covering six notes: 2-1-2-3-4-5. All tests are performed by ear, the object generally being smooth knob functions, clean switch functions, and consistency between the voices. Note that it is normal for the knobs to achieve their full range at only 7 or 8 on the dial. There will always be subtle differences between the voices. If not excessive, these non-uniformities help "warm" the Prophet's sound.

To help identify an errant voice, you may be able to use the fact that following TUNE, the voices are initially assigned in order, 1 through 6. After these initial assignments it is difficult to predict the voice assignment. After functional testing, when the cabinet is opened, it will be easy to probe around PCB 4 to find the bad voice. Actually the easiest way to identify the voice is to simply touch the ICs with your finger, while holding the key to which the bad voice is assigned.

Note that since the Prophet always presets to program 00 on power up, it will be necessary to switch PRESET off each time manual control is desired.

All tests begin with controls positoned as shown in Figure 1-1. The essential features of this patch are that no oscillator waveforms are switched on, the filter and amplifier are fully "open," and there is no modulation.

VOICE DEFEAT = (hold key) + RECORD/7

1-3 OSCILLATOR A

1. Activate TUNE. Switch PRESET off (Manual Mode) and patch according to Figure 1-1.

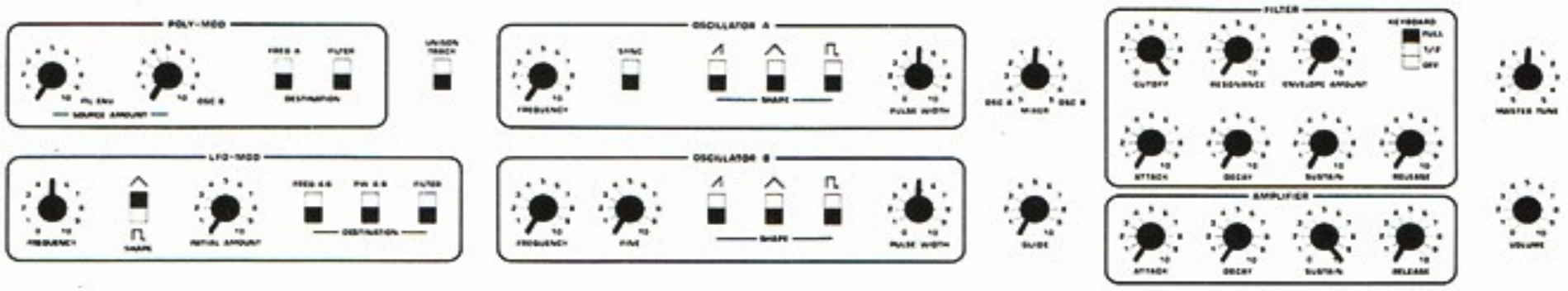

Figure 1-1
BASIC TEST PATCH

2. Switch on OSC A SAWTOOTH. This should enable a brassy sound.

3. Check MIXER operation by rotating through its range. Set fully clockwise (CW) to OSC B. Play some chords at the high end. There should be nothing audible. Leave MIXER set fully counterclockwise (CCW), to OSC A.

4. Raise OSC A FREQUENCY gradually by each semitone (while playing six voices).

5. Check that the range is four octaves:
   a. Set FREQUENCY to 0.
   b. Play C5 (highest key). Remember pitch.
   c. Turn FREQUENCY to 10.
   d. Play C1 (second to lowest C). Must be same pitch.

6. Set FREQUENCY to approximately 4.

7. Switch SAWTOOTH off and TRIANGLE on. This should yield a pure timbre, with no obvious distortion, but at a lesser volume than the sawtooth.

8. Switch TRIANGLE off and PULSE on. This should be a full tone with no apparent distortion.

9. Adjust PULSE WIDTH and observe smooth change in timbre. Find the point where the second harmonic (the octave) drops out. This square wave should be near "5" on the dial for all voices. At the extreme knob settings the pulses will "thin out" until they degenerate to dc, resulting in no audio output. Return to "5".

10. Switch SYNC on. While rotating OSC A FREQUENCY through its range, listen for timbral sweep. Switch SYNC off.

1-4 OSCILLATOR B

1. Activate TUNE. Switch PRESET off (Manual Mode) and patch according to Figure 1-1.

2. Switch on OSC B SAWTOOTH. This should enable a brassy sound.

3. Check MIXER operation by rotating through its range. Set fully CCW to OSC A. Play some chords at the high end. There should be nothing audible. Leave MIXER set fully CW, to OSC B.

4. Raise OSC B FREQUENCY gradually by each semitone (while playing six voices).

5. Check that the range is four octaves:
   a. Set FREQUENCY to 0.
   b. Play C5 (highest key). Remember pitch.
   c. Turn FREQUENCY to 10.
   d. Play C1 (second to lowest C). Must be same pitch.

6. Set FREQUENCY to approximately 4.

7. Check that FINE has a one-semitone range. Return to 0.

8. Switch SAWTOOTH off and TRIANGLE on. This should yield a pure timbre, with no obvious distortion, but at a lesser volume than the sawtooth.

9. Switch TRIANGLE off and PULSE on. This should be a full tone with no apparent distortion.

10. Adjust PULSE WIDTH and observe smooth change in timbre. Find the point where the second harmonic (the octave) drops out. This square wave should be near "5" on the dial for all voices. At the extreme knob settings the pulses will "thin out" until they degenerate to dc, resulting in no audio output. Return to "5".

1-5 FILTER

1. Activate TUNE. Switch PRESET off (Manual Mode) and patch according to Figure 1-1.

2. Adjust CUTOFF to 5.

3. Increase RESONANCE. All six filters should start to oscillate between 7 and 8 on the dial.

4. With RESONANCE at 10, all voices should have nearly equal volume and track the keyboard in fairly good tune.

5. Adjust CUTOFF gradually. Listen for smooth frequency control of the resonating filters. Return CUTOFF to 5.

6. Switch KEYBOARD to 1/2. Instead of tracking the keyboard semitones, the filter will now track in quartertones.

7. Switch KEYBOARD to OFF. Keyboard tracking is disabled. Return to FULL.

8. Set FILTER ATTACK to 4.

9. As the ENVELOPE AMOUNT knob is raised, each keystroke should cause the filter frequency to climb then snap back to its initial frequency. Leave ENVELOPE AMOUNT set to 4.

NOTE: All envelope times have a maximum of nine seconds.

10. Check the ATTACK range. Return to 0.

11. Check DECAY range, which is exhibited by a descending sweep. Return to 0.

12. Observe that raising and lowering SUSTAIN directly controls the filter frequency. It is normal for this knob to yield five levels. Leave set to 5.

13. Check the RELEASE range. Note that to hear the filter release, the amplifier release must be set to equal or higher duration.

1-6 AMPLIFIER

1. Switch PRESET off (Manual Mode) and patch according to Figure 1-1.

2. Switch on OSC A SAWTOOTH. The attack time is instantaneous.

3. Turn AMPLIFIER SUSTAIN to 0.

4. Check the ATTACK range. Return to 0.

5. Check the DECAY range. Return to 0.

6. Observe that raising and lowering SUSTAIN directly controls the voice amplitudes. Leave set to 10.

7. Check the RELEASE range.

1-7 LFO-MOD

1. Switch PRESET off (Manual Mode) and patch according to Figure 1-1.

2. Turn OSC A FREQUENCY to about 4.

3. Turn OSC B FREQUENCY to about 4.

4. Switch on OSC A SAWTOOTH.

5. Switch FREQ A-B on.

6. Raise the INITIAL AMOUNT knob and check pitch modulation on all six voices. Leave set to 5.

7. Check the LFO FREQUENCY range.

8. Switch SHAPE to SQUARE and listen for alternating pitches. Return to TRIANGLE.

9. Switch OSC A SAWTOOTH off.

10. Switch OSC B PULSE on. Check pitch modulation on all voices.

11. Switch FREQ A-B off and PW A-B on. Check pulse-width modulation. Adjust INITIAL AMOUNT.

12. Switch OSC B PULSE off.

13. Switch OSC A PULSE on. Check modulation. Adjust FREQUENCY and INITIAL AMOUNT.

14. Switch PW A-B off and FILTER on. Decrease CUTOFF as needed to clarify filter modulation.

1-8 POLY-MOD

1. Switch PRESET off (Manual Mode) and patch according to Figure 1-1.

2. Turn MIXER all the way towards OSC A.

3. Switch on OSC A SAWTOOTH.

4. Adjust OSC A FREQUENCY to about 4.

5. Switch on OSC B SAWTOOTH.

6. Switch on POLY-MOD FREQ A.

7. Check range of frequency modulation (FM) applied by POLY-MOD OSC B.

8. Switch OSC B SAWTOOTH off.

9. Switch OSC B TRIANGLE on. Check that it creates FM. Switch TRIANGLE off.

10. Switch OSC B PULSE on. Check FM. Vary OSC B PULSE WIDTH. Leave set to 5.

11. Switch POLY-MOD FREQ A off.

12. Switch POLY-MOD FILTER on.

13. Adjust FILTER CUTOFF to 6. Check for filter modulation on each voice.

14. Switch POLY-MOD FILTER off.

15. Return FILTER CUTOFF to 10.

16. Switch POLY-MOD FREQ A back on.

17. Turn POLY-MOD OSC B to 0.

18. Turn POLY-MOD FIL ENV to 5.

19. Alter filter envelope settings to produce various pitch sweeps. (Remember that the amplifier release setting must at least match the filter release.)

20. Check range of POLY-MOD FIL ENV knob.

1-9 DAC GAIN

Units fitted with the Burr-Brown DAC-71 do not have DAC GAIN trimmers.

> NOTE: The DAC GAIN is factory set. Do not readjust unless a repair has been made in the DAC/ADC circuit.

1. Switch power off.

2. Connect voltmeter to Mixer A CV Sample/Hold, U426-7.

3. Switch power on.

4. Turn the Mixer knob until the EDIT LED lights, then turn it all the way towards OSC A.

5. Trim R4333 for 4.9V reading (this is not critical).

1-10 SCALING

Now that the Prophet-600 has been thoroughly warmed up, it can be scaled. Oscillator and filter scaling is simplified through the use of a special routine which can be activated only after the instrument is opened up:

1. Switch power off.

2. Remove the two upper screws from both wooden side panels.

3. Lift up the front panel.

4. Locate TP301 SCALE, and jumper it to adjacent +5V TP.

5. Switch power on.

6. For the remainder of the procedure hold the front panel or arrange it so the TO and FROM TAPE LEDs can be viewed, yet there remains enough access to adjust the eighteen voice trimmers.

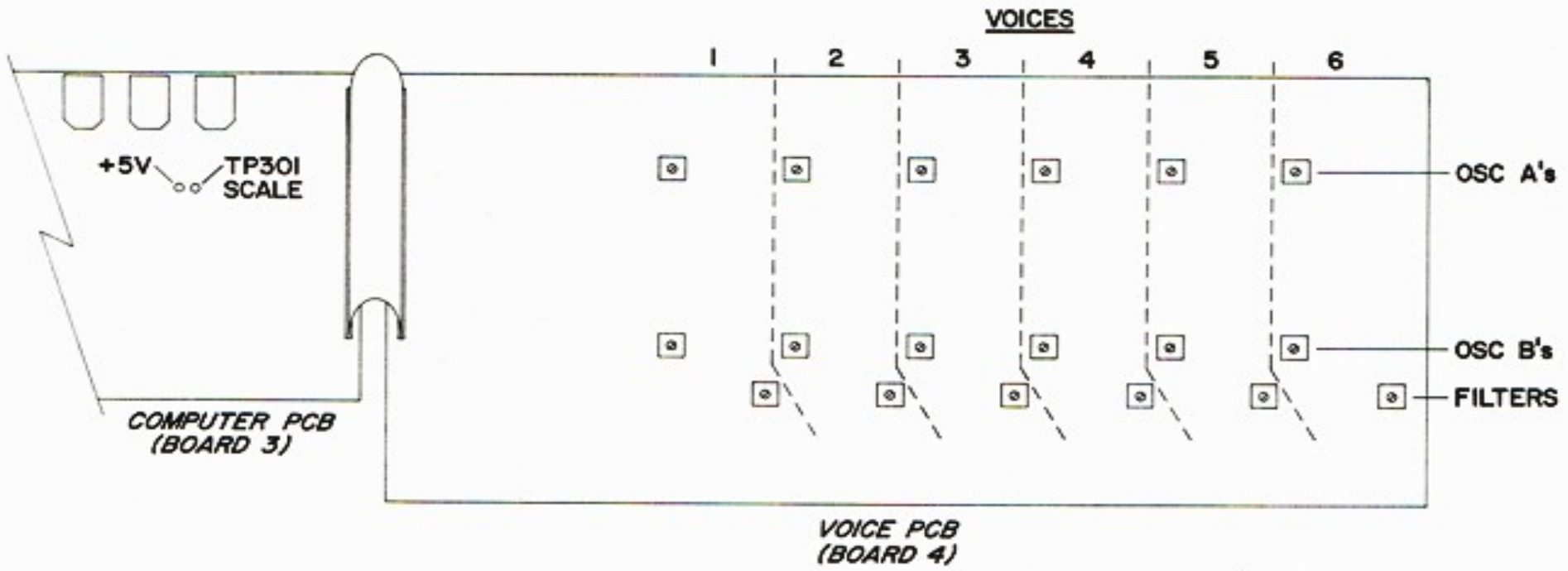

Figure 1-2
SCALING ADJUSTMENTS

7. Either the TO TAPE or FROM TAPE LED will be lit, and the SEQ 1 LED is lit. The system is now waiting for you to trim OSC 1A. As shown in Figure 1-3, six control switches now serve to indicate which voice is being scaled. For example, SEQ 1 being lit means that Voice 1 should now be trimmed.

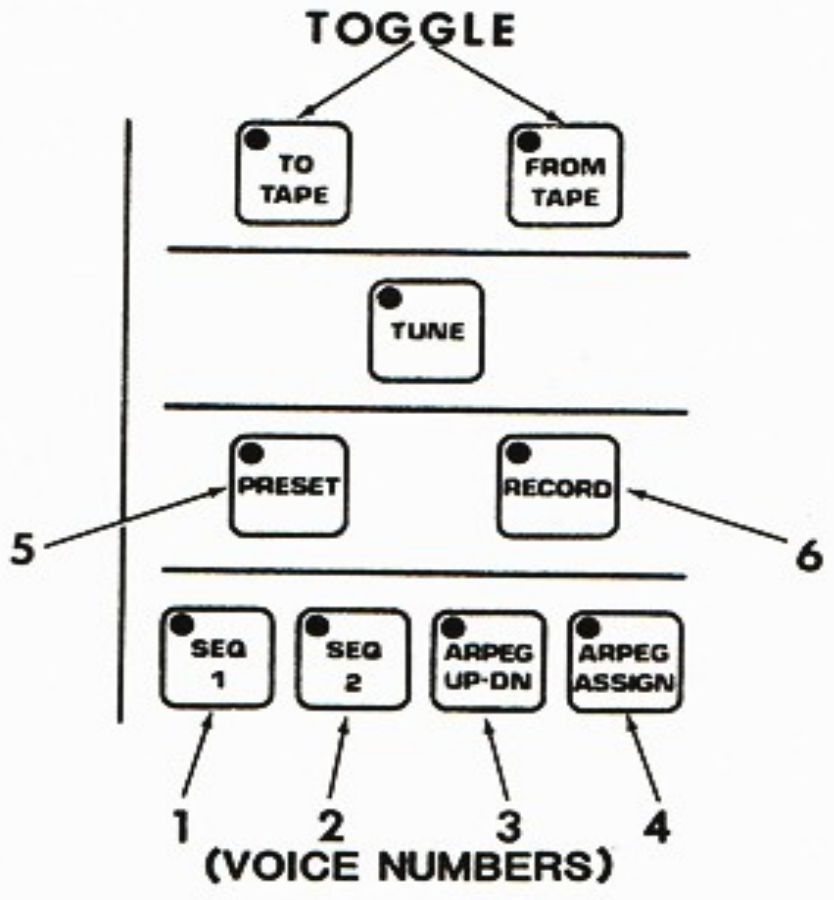

Figure 1-3
VOICE SCALING INDICATORS

8. As you turn OSC 1As scaling trimmer, the TO and FROM TAPE LEDs will toggle. Set the trimmer near the toggle point. You may be able to discern two toggle points, as the trim is attempted clockwise, then counterclockwise. Either point will do, with the midpoint between them slightly preferred. Basically, you want to "encourage" the lights to toggle.

As you toggle back and forth, the toggle points get closer together until they overlap. (with newer ROMs)

See FB13; if trouble with range of scaling trimmer, may need to change resistor in series with it

9. When OSC 1A is scaled, press any PROGRAM SELECT 1-6, to move on to OSC 2A. The SEQ 2 LED will light, to indicate that Voice 2 should be trimmed.

10. Scale OSC 2A, then press any PROGRAM SELECT 1-6 to move on to 3A through 6A. (If it is desired to immediately exit the scaling routine without advancing through any remaining adjustments, simply remove the TP301 jumper.)

11. After OSC 6A, trim OSC 1B-6B (the second row of trimmers), then Filters 1-6 (the third row). Note that when tuning filters, there is a slight delay before each voice trimmer will respond.

12. After Filter 6 is scaled, pressing any switch 1-6 exits the scaling routine, activates TUNE, then enters Preset Mode.

13. Remove jumper, press TUNE, then verify tuning by playing a few programs.

14. If the scaling procedure fails to correct an oscillator, repeat to be sure an error wasn't made. To verify an oscillator IC is bad, exchange it with an oscillator from another voice. Re-scale.

1-11 MODIFICATION CHECK

If the Prophet-600 is serial number 0001 through 0113, the modification described here is required to prevent memory loss and erratic sequencer operation. Check for existence on these units and install if necessary (order kit #UD600-01). This modification is covered under warranty. (For more information, contact SCI Field Service.)

Identifying the modification.
U310 EPROM should be labelled SIX.0.1. The hardware modifications are shown on Figure 1-4. If these are not present, follow procedure below.

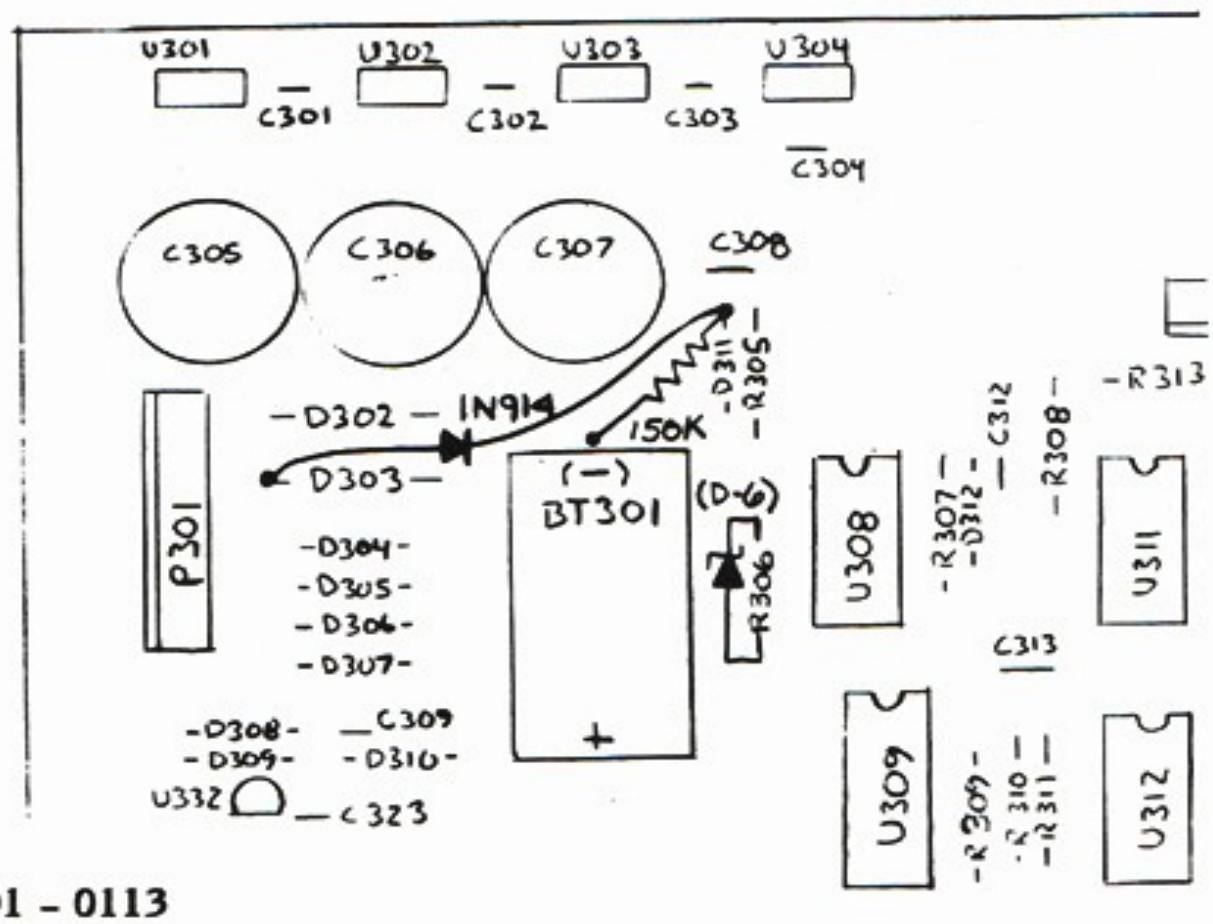

Insulate leads!

Figure 1-4
MODIFICATIONS for units 0001 - 0113

1. Switch power off and disconnect the power cord.

2. Remove U310 (2764 version SIX.0.0). Replace with SCI Part No. Z-1004 (2764 Version SIX.0.2).

> NOTE: It should be possible to do the following without removing PCB 3. Remove all components and desolder holes with a vacuum syringe, to allow easy insertion of replacement parts.

3. Locate and remove R305 (39K) and replace with 24K (R-073).

4. Locate and remove R306 (15K) and replace with 6V Zener diode (D-006). Observe polarity. This diode becomes D315.

5. Add D316 1N914 (D-005) from D303 to D311 as shown. Observe polarity. Insulate leads with tubing.

6. Add R335 150K between D311 and ground at the battery, as shown.

1-12 WHEEL ALIGNMENT

NOTE: Mechanical wheel alignment must be followed by the calibration routine, step 15 on page 1-5.

See Figure 1-15. The wheel rotation is limited by two molded stops on the wheel. When replacing with a new wheel (SCI #M-352), be sure the limiting stops are correctly oriented.

The PITCH wheel is supposed to be set to 2.5V (half of its 5-V range) when centered. So while measuring the wiper voltage, use a screwdriver to trim the shaft of R1 to read close to 2.5V. Move wheel up and down, trimming for best repeatability of this reading. Then tighten the set screw.

The MOD wheel must be able to turn off fully. To trim, simply make sure the wiper is fully grounded when the wheel is fully down. Then tighten the set screw.

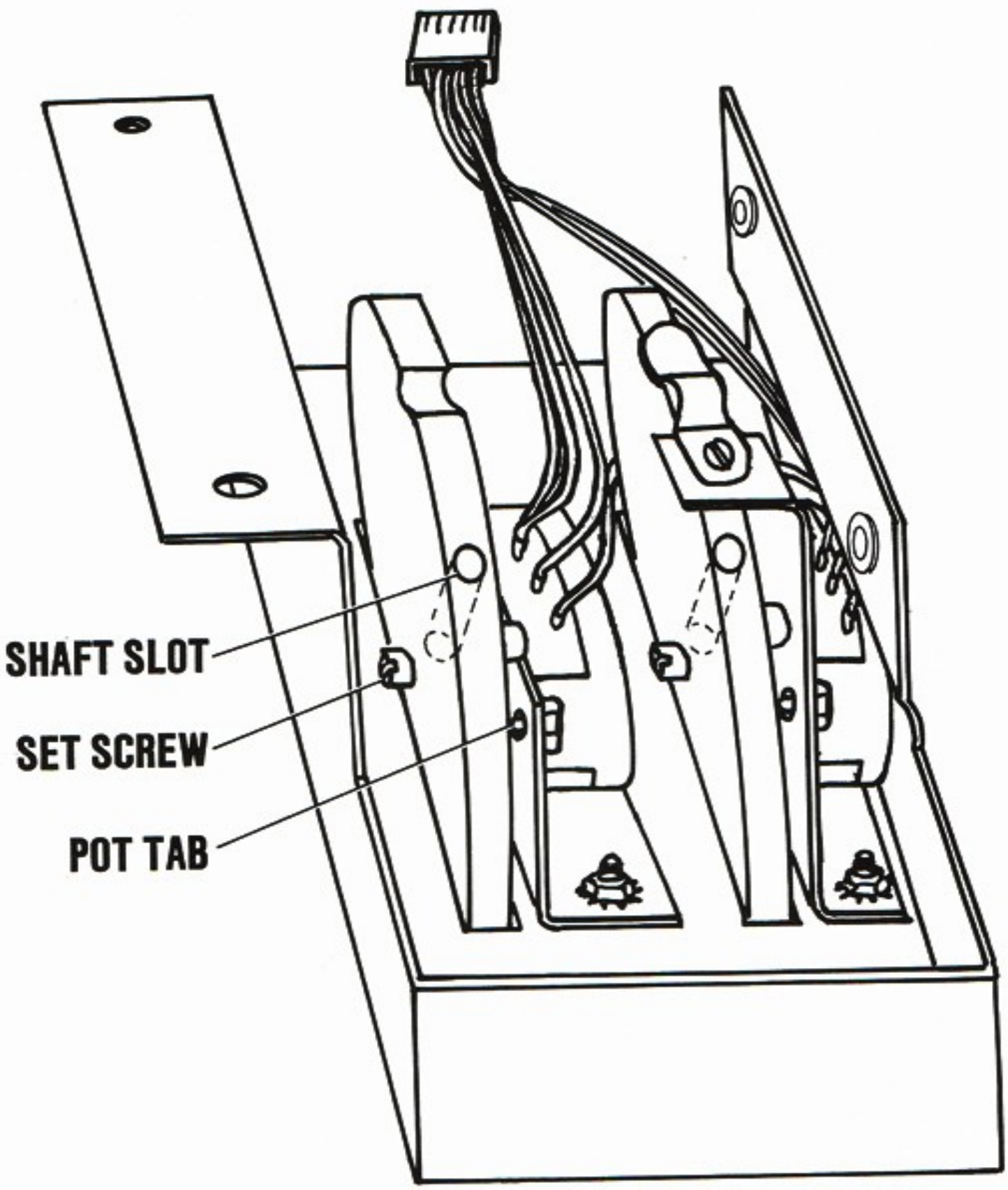

Figure 1-5
WHEEL BOX

2-0 GENERAL

This section explains the Prophet-600's theory of operation. First a general discussion provides a functional overview, then the microcomputer and synthesizer circuits are detailed. Throughout it is assumed that the reader is both familiar with operation of the instrument (see Operation Manual CM600) and with the functions of common linear, TTL, and CMOS integrated circuits (ICs). Anyone contemplating repair or modification work on the Prophet-600 must already be familiar with op amp circuits and digital logic.

The Prophet-600 is a programmable polyphonic hybrid synthesizer. The term "hybrid" refers to the combination of digital and analog circuitry. The digital side features a 4-MHz Z-80A microcomputer system with an 8K EPROM operating system and 4K of non-volatile RAM. This system processes keyboard and control panel inputs into suitable control voltages (CVs) and switch signals which control the sound produced by the analog synthesizer voices. See Figure 2-0.

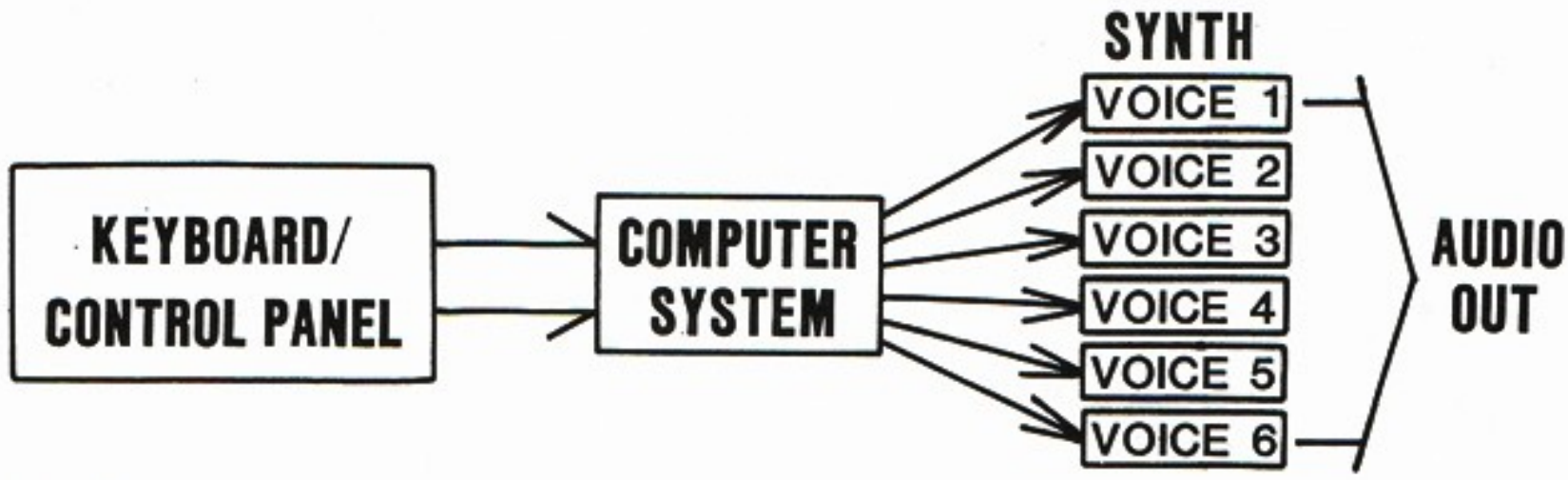

Figure 2-0
GENERAL BLOCK DIAGRAM

Converting all synthesizer control signals into digital form allows sets of control data which comprise an instrument or effect to be stored in memory as "programs," and be instantly available as a control selection. Sets of real-time keyboard data are also stored in memory as "sequences." So the microcomputer primarily functions as a controller (rather than as a synthesizer).

But while the Prophet-600 emobodies this basic design philosophy of the Prophets -5 and -10, its computer system differs by participating more directly in the synthesis itself. Most significantly, there are no separate, integrated analog envelope generators (as in the -5 and -10). Instead, the envelopes are calculated by the computer and appear as dynamic CVs (at the sample/holds) for each voice filter frequency and amplifier gain. A noteworthy side-effect of this is that the familiar TRIGGER and GATE signals for each note no longer appear in the synth. And, for POLY-MOD, since the filter envelope is already "in" the computer, it is through software integrated into the CVs for selected POLY-MOD destinations.

The independent modulation LFO is also "synthesized" by the computer. When modulation destinations are enabled, the LFO is digitally summed into, for example, the twelve separate oscillator frequency CVs, two pulse width (PW) CVs, or six filter frequency CVs. The PITCH and MOD wheels are also fully digitized. The great benefit of these changes is that there is no need for Common Analog circuitry with a dozen op amp summers and matched resistors.

In the conversion of the formerly analog envelope generator, LFO, VCA , Glide, and summer functions into digital form, one witnesses a specific example of the predicted influence on design of the decreased cost of digital memory, compared to analog hardware. But the -600 also benefits from the higher level of integration of quality synth functions offered by some new analog ICs. The -600 has far fewer analog components and adjustments than earlier Prophets. This all means lower price, lower power consumption, less heat, better reliability, better oscillator and filter stability, and easier service.

Figure 2-1 looks at the general functions more closely. Tracing backwards from the AUDIO OUT jack, the six (polyphonic) voice outputs are summed and the overall level set by the Final Voltage Controlled Amplifier (VCA). This VCA is controlled by the MVOL CV which usually follows the setting of the VOLUME knob. During TUNE the computer sets MVOL CV to zero so the process is not audible. In this case the TUNE COMPARATOR routes selected oscillator or filter pulses to the TUNE circuitry.

Each voice contains voltage controlled oscillators A and B and a voltage-controlled combination mixer, 24 dB/octave resonant low-pass filter, and amplifier. Connections between these ICs are made by seven digitally-controlled analog switches. (The voice signal flow is described in general in the Operation Manual and in more detail below.) The computer provides CV and switch signals either from its memory (Edit mode) or as set on the control panel (Edit/Manual modes).

All CVs which control the synthesizer originate in the voltage demultiplexer (DMUX). The demultiplexer can be thought of as a spinning rotary switch which momentarily routes a specific analog voltage from the digital-to-analog converter (DAC) to each sample/hold (S/H). These devices sample the DAC voltage and hold it until the next sample. Each S/H voltage value is latched by the LO and HI -order DAC LATCHES. The S/H selected of the 32 depends on the data latched by the CV DMUX ADDRESS LATCH. The seven switch control signals are simply bits latched by U330/31.

The microcomputer system (the term "system" emphasizes the combination of hardware and software) consists of the CPU, program memory (EPROM), non-volatile memory (NV RAM), and input/output (I/O) interface. The Timer is used in the TUNE system and the UART handles MIDI communication. The CPU executes the program permanently residing in the EPROM. This determines how the various input devices--switches and knobs--are "scanned," how the data resulting from these scans are processed, and how the output devices--LEDs, latches, and S/Hs--are "strobed" with the processed data.

The three kinds of mechanical switches in the Prophet-600--program/mode membrane panel, synthesizer slide switches, and keys--are all wired into one switch matrix. The mebrane panel is used for mode select and control operations which (besides their internal functions) only appear as outputs to their accompanying LEDs through the LED matrix. The slide switches, however, control the synthesizer. So do most of the knobs, which are read through the potentiometer multiplexer (POT MUX) and analog-to-digital comparator (ADC CPR). The current physical status of the control

Figure 2-1
ABSTRACT SCHEMATIC

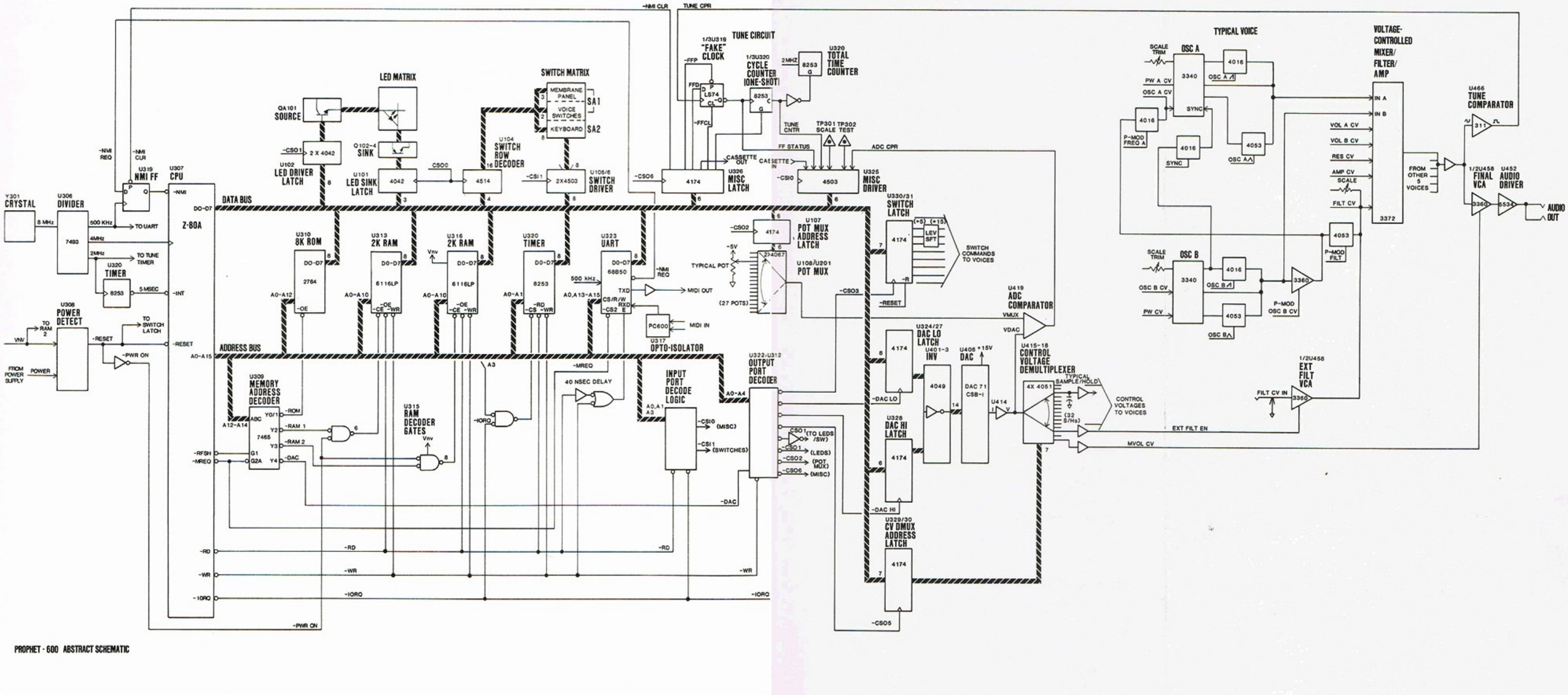

PROPHET - 600 ABSTRACT SCHEMATIC

inputs--on/off for switches, position for knobs--is always maintained in the "Edit" table in RAM. In Preset mode, the selected program is written into the "Current" table which controls the synthesizer. If one alters a knob or switch setting in the Edit table, that change is written to the "Current" table, and will show up as a different sound. The original program remains unaffected, unless you record the Current table in that location.

With these basic functions sketched out, we can now turn to specific circuit descriptions. The hardware is emphasized for several reasons. One is that the software is proprietary. But more importantly, program details are generally not relevant to service problems. If you first understand the hardware comprising a specific circuit or function, you will be able to deduce the important program functions.

Documents referenced below are found in Section 3. (On the schematics, the capital letters boxed where signals are continued between pages code the sheet on which the continued signals are found.)

2-1 PHYSICAL ORGANIZATION

Because digital circuits are capable of introducing disruptive and objectionable noise into their analog neighbors, hybrid design offers some stiff layout challenges. Of course the Prophet-600 benefits from SCI's experience in this area. It has been laid out especially with regard for noise reduction. The ground system is a true star configuration. The controls are wired with separate digital and analog ground and power supplies on the main control panel. The digital ground connects through PCB 3 to PCB 4. THe analog ground connects directly to PCB 4. The single ground connection between the electronics and chassis occurs through the AUDIO OUT jack. When operating disassembled, this connection must be jumpered.

Refer to the interconnect diagram (ID600-1). PCB 1 contains the majority of control panel circuitry, namely, the LED and switch matrices and POT MUX. The membrane panel is held to the front panel with its own adhesive. Through the panel, J101 connects the pad to the switch matrix. NOTE! If the pad malfunctions, check this connection. P103 wires-in the keyboard. Of course all of these switch lines are digital. P104 is also all digital, conveying the data bus, +5V digital supply (from PCB 3), and a few chip selects (CS) from PCB3. The wheel cable at P102 carries out +15V and analog ground to the wheels and returns their two wiper potentials. The analog ground system in the control panels and the multiplexer output Vmux is brought out to PCB 4 through TB101. This insures accurate ADC by relieving any ground difference between the POT MUX and ADC/DAC.

PCB 2 contains a POT MUX plus one extra pot and one switch. Inputs to PCB2 over TB102/201 are the digital scan lines for this switch, and POT MUX address lines (which select each pot), plus +5V analog supply and analog ground. The outputs to PCB1 are the switch state, analog Vmux and the wiper voltage of the OSC A PW pot.

PCB 3 includes the power supply, computer, and most input/output (I/O) hardware. P301 connects the power transformer secondary. P302 connects the MIDI jacks. As mentioned, J304/P104 carries all the digital control panel data.

For low noise, the data bus itself does not go over to PCB 4. TB302 is a power supply buss, carrying +/- 15V, -5V, and ground. TB303 transfers fourteen latched bits to the

DAC. TB304 sends seven DMUX address lines, and receives the outputs of the ADC CPR and tune comparator (TUNE CPR). The synth switch commands, and a +5V supply line go out over TB305. And, as mentioned, Vmux comes in separately from PCB 2, through P401. This makes for very-low noise in the ADC circuit.

The main power supply on PCB 3 generates +/- 5V and +/- 15V. Only +5 goes to PCB1, for digital. PCB 1 has a separate +5V regulator for analog. The feed voltage to this regulator comes via PCB 4. PCB 4 receives -5V and +/-15V from PCB 3.

2-2 NON-VOLATILE RAM PROTECTION AND POWER DETECTION

We begin the circuitry discussion from the condition of power off. To maintain the integrity of the sound programs stored in RAM a constant voltage to the RAMs is required and the CPU must be disabled during power-on/off transitions. See SD600-3, sheet "C" in the document section. Battery BT301 (located on the schematic near the 78L05 regulator) supplies 2.9V, which is dropped to 2.2V by D310. This Vnv (nv=non-volatile) powers U313 and U316, the 6116LP 2K x 8 bit static RAMs which hold the programs and sequences. Two logic packages, which operate the power detector and RAM protect circuit, and capacitor C312 also receive Vnv.

One of these packages is in the power detector circuit. U308-1 is high because both inputs are low (since power is off). This high is applied directly to U308-9, and to U308-8 through D312. U308-10 -RESET is therefore low (true). The CPU (U307-26) will remain reset until this line goes high (false). It also (via the line to sheet D) holds programmed switch latch U331 (-CS03) clear. This helps prevent random squawks which result because the switches connected to this latch momentarily close on power-up.

Inverting the -RESET signal, U308-13 is high, that is, -PWR ON is false. In the RAM protect circuit, this high disables RAM decoder gates U315-6 and -8 (the second nv logic package). The two RAM -CE (chip enable) lines are high, preventing alteration of memory.

When power is switched on regulator U332 through D309 simply overrides the battery voltage, providing standard operating voltage for the NV RAMs and two logic packages. D308 biases the common terminal of the regulator 0.6V above ground. This sets a regulator output of +5.6V. But D309 drops 0.6V, resulting in a net +5V supply. D310 prevents this voltage from charging the (not rechargable) lithium battery. U301, the main +5V regulator, comes to life and starts the system clock (discussed below).

Meanwhile, in the power detect circuit, D311 and D316 form their own full-wave rectifier which presents the first peak across filter C308/R335 and divider R305/D315. When the divided voltage exceeds the 6V Zener by the CMOS high threshold of about 3.5V, in other words 9.5V, U308-1 goes low. Input U308-9 goes low immediately. Pin 8, however, is held high by the (Vnv) charge on C312, which begins to discharge through R307. After about one second, pin 8 falls low enough so U308-10 -RESET can go high, enabling the CPU and switch latch. U308-13 -PWR ON goes low, enabling RAM access through the decoder gates.

When power is switched off the falling voltage causes the power detector to immediately pull -RESET low, stopping the CPU even though the system clock may still be running. Then the false -PWR ON signal again disables any RAM access. This prevents random instructions from being performed during power-down which could alter RAM contents.

2-3 SYSTEM CLOCK

The system clock is generated by Y301 8-MHz crystal and two inverters of U305 in a simple RC oscillator circuit.

(The miscellaneous gates U305-2, U311-3, and U312-3 only allow the injection of test clock signals at the factory. Pulling U311-1 low disables the 8 MHz clock. The test clock is then injected at U312-2.)

Divider U306 provides 4 MHz for the Z-80A. In addition, two slower clocks drive the interrupt system, Tune system, and MIDI serial interface. The 2 MHz output drives U320-9 interrupt clock and U320-15 Tune Total Time counter. The 500 kHz output drives ½U319 NMI CLR flip-flop and U323 UART. The purpose of these clock signals will be discussed in each circuit.

2-4 MICROCOMPUTER

With the clock running and -RESET high, the CPU's program counter is initialized to memory address 0000H (Hex). All address lines A0-A15 will be low. A0 through A12 define the first memory location in EPROM U310. But this is not enough to read the instruction in this location because many memory and I/O devices share these address lines. A signal is needed to differentiate the EPROM from the RAMs and other devices. This signal is generated by U309 Memory Address Decoder. With A12 through A14 low, and -MREQ input low--which indicates that the address bus holds a valid memory address--to -G2A the decoder output -Y0 goes low. -RFSH indicates that the address bus holds a valid refresh address. Applied to G1, this signal is used to disable the decoder whenever this is the case. The -Y0 output nors its way through U311-6, becoming the -ROM signal which actually enables (-OE) the output of the EPROM. (Although using the 2764 -CE input would reduce power consumption, -OE was used for maximum memory access speed.) The EPROM places the instruction from location 0 on the data bus (D0-D7), from which it is retrieved by the CPU's instruction register.

Any program address in the first 4K bytes of memory (0000H-0FFFH) will be selected by -Y0. Addresses in the next 4K (1000H-1FFFH) will set A12, therefore -Y1 will appear. Either signal produces the -ROM strobe through U311-6.

All EPROM operations are memory-read. When the CPU needs to write to or read one of the RAMs, the decoder selects -RAM1 for addresses 2000H-27FFH or -RAM2 for 3000H-37FFH. These strobes are gated to the RAMs by U315-6 and -8 only if power is on (see above). The transfer of data from CPU to RAM is enabled by the -WR (write) line being true. The opposite direction, from RAM to CPU, is enabled by -RD (read).

Also from the memory address decoder, the -DAC line is combined with and A0 to produce a strobe for the DAC LO and HI output latches at memory addresses 4000H and 4001H, respectively. Memory-mapping the DAC provides a fast and easy way to send it the data which it converts to the various synthesizer CVs.

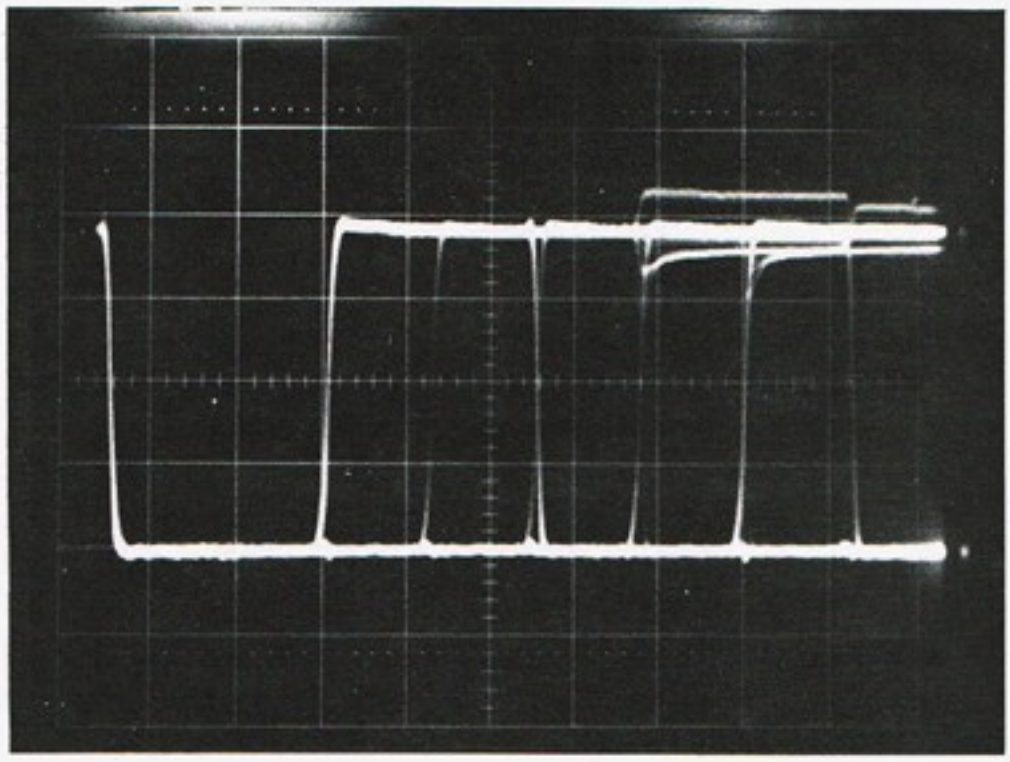

V: 1V/div
H: .1 us/div

Figure 2-2
ADDRESS A0

The uppermost memory-mapped device is U323 UART, which has two control registers that need to be accessed. These are decoded somewhat differently from the other memory locations. The combination of A0, A13, A14, A15 define 6000H and 6001H as write address (A15 low), and E000H/E001H as the read address (A15 high). (The 40 nsec delay applied to -RD which is gated through U314-8 times the clock pulse needed to interface this 6800-system part to the Z-80A.)

Input/output interface follows similar principles as memory interface. The address lines define ports which are validated by -IORQ (instead of -MREQ). -IORQ (CPU pin 20) connects between U320 8253 timer, an input port decoder made from a few gates, and U322 output decoder which is similar to the memory decoder. With regard to I/O, -RD true defines an input operation, typically from data bus drivers which hold data from the keyboard or control panel (that, is ADC). -WR defines an output to a latch or register. For example the timer is I/O mapped because it is too slow to run memory-mapped at this speed. (I/O inserts an extra 250 ns wait state.)

2-5 COMPUTER TROUBLESHOOTING

For troubleshooting, it should be emphasized that most computer malfunctions are caused by failures of devices connected to the data bus. A shorted latch input (for instance) can prevent an entire data line from achieving the minimum voltage needed to signify a high signal. Shorts between data lines will also confuse the computer terribly.

If you suspect a data bus problem, try to pick out the lines with questionable levels. For example, Figure 2-3 shows a normal data bus. The low voltages don't rise above 500 mV, while the high voltages are generally 4 to 5V, with occasional 3.5-V levels for CMOS devices Note the solid ground line.

V: 1V/div
H: 1.9 us/div

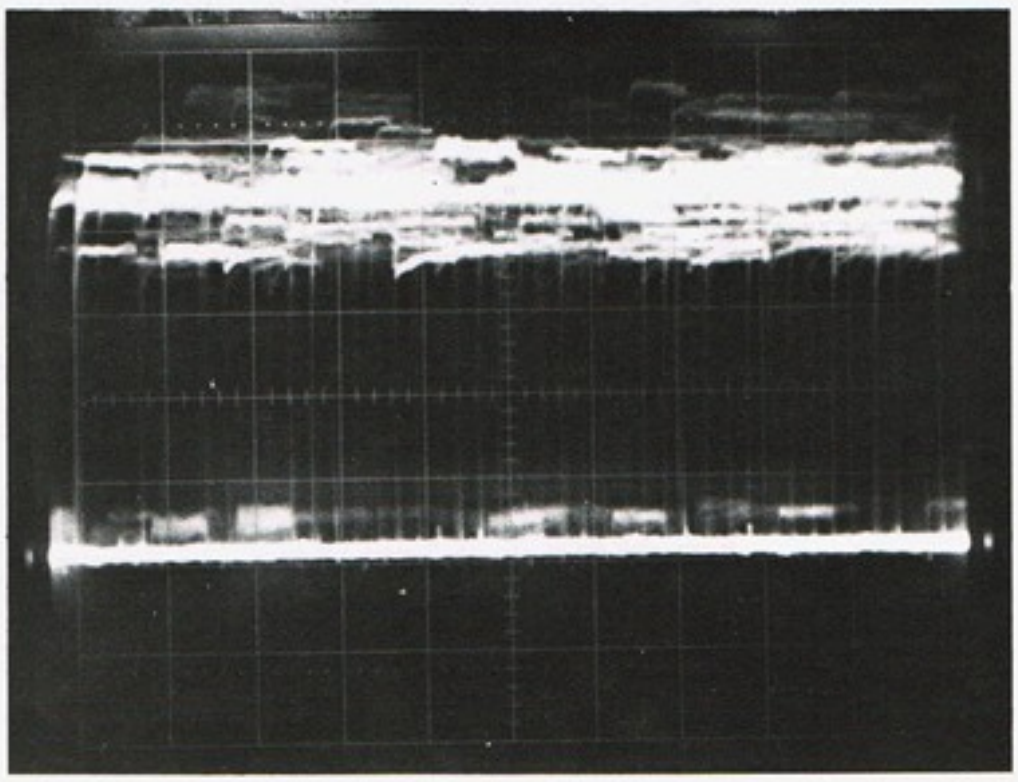

Figure 2-3
NORMAL DATA BUS

Figure 2-4 shows what the same bus line looks like when shorted to +5V by a failed device (in this case simulated by a 50-Ohm resistor.) The malfunction is indicated especially by the signals in the 1 to 3V range and by the lack of solid ground.

V: 1V/div
H: 1 us/div

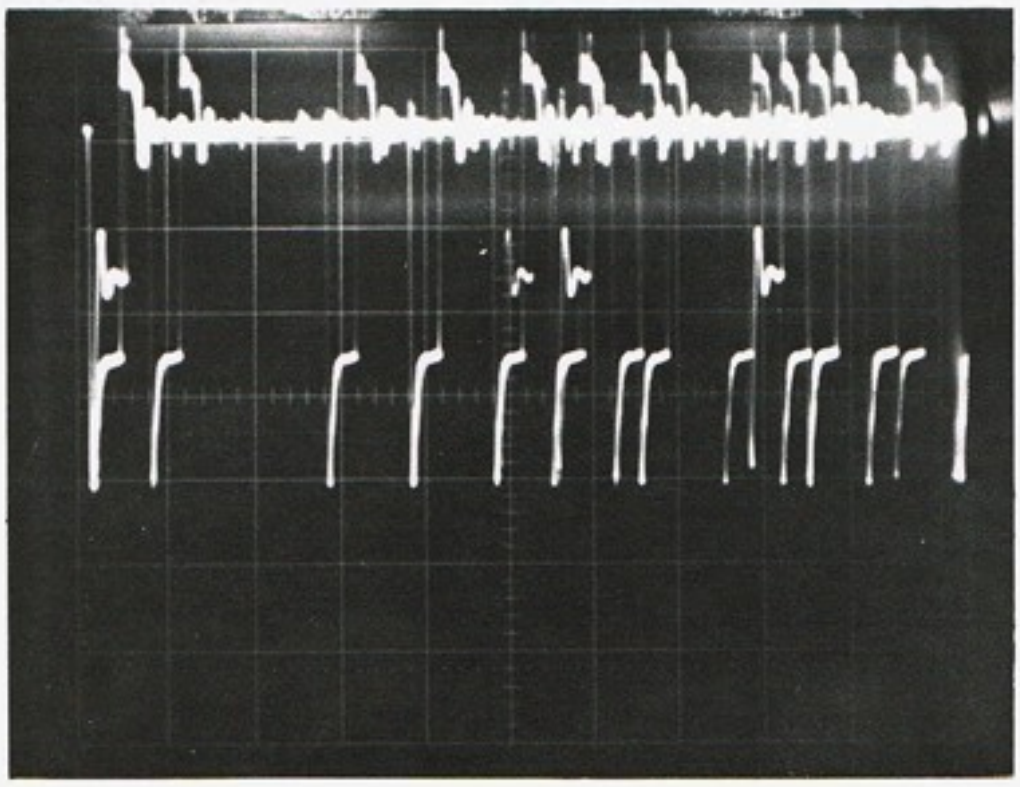

Figure 2-4
SHORTED DATA BUS

Shorts may occur within a device or between printed traces. But since the computer is known to have been running, the problem is more likely to be device failure than a problem with the traces. Nevertheless it is probably best to begin troubleshooting the computer with a close visual inspection, especially around sockets. (Magnifying glasses are often helpful.) If you see no evidence of mechanical problems such as broken traces, broken sockets, conductive particles, botched soldering or careless repair attempts, try removing or swapping socketed devices such as the CPU, EPROM, and RAM. Even if the computer isn't running (due to one of these devices being missing), a change in static voltage indications could be a good clue about which is the bad part.

If you have checked all socketed components (perhaps even a few unsocketed ones), then there may be no recourse but to cut printed circuit traces. The customary technique is to make the first cut at the electrical center of a the bus line, to isolate the problem to one half or the other. When the cut has yielded information on the direction of the malfunction, it should immediately be repaired--to prevent unrelated malfunctions. Then halve the suspect trace again, and so on, until the bad IC (or socket, or shorted trace) is isolated.

2-6 INTERRUPTS

With the basic architecture of the microcomputer now introduced, we can look at the input and output processes in more detail.

To accomplish real-time tasks such as calculating envelopes and responding to MIDI inputs, the Prophet-600 microcomputer is interrupt-driven at a constant rate. The Z-80 has two interrupt inputs: -INT (Maskable Interrupt) and -NMI (Non-Maskable Interrupt). The first is constantly clocked, the second is used only for MIDI (see below).

Timer U320-10 which forms the Interrupt Clock was briefly mentioned above. This third of the triple-timer device is programmed to divide-by-10,000, yielding the 200 Hz (5 ms) -INT signal. Because this interrupt is "maskable," there are some rare occasions during which -INT is ignored. But normally each interrupt pulse forces the CPU to:

Calculate the current values and effects of the six separate envelopes.
Calculate the LFO.
Calculate the effect of GLIDE.
Refresh the LEDs.
Alternately read the PITCH or MOD wheel (because these can be expected to be moving constantly or quickly).
Read one other control knob (because these can be assumed to be moving rarely and slowly).
Refresh all CV Sample/Holds.

All of this interrupt processing takes about 4 ms. This leaves less than 1 ms until the next interrupt, during which time the CPU resumes background tasks such as reading the keyboard and figuring voice assignment.

2-7 MIDI

For programming information see "The Complete SCI MIDI."

U323 MIDI UART allows two microcomputers to communicate keyboard and program information. As the keyboard is played this data is converted to the MIDI protocol and sent to the UART one byte at a time, for transmission to any receiver which may be connected. The MIDI standard hardware is a 5-mA current loop, designed especially to prevent the formation of audio ground loops which can develop in complex systems.

The UART converts parallel bytes written to its memory-mapped transmit register into serially-formatted bytes consisting of a start bit, 8 data bits (D0 to D7), and a stop bit. The transmission occurs at 31.25 kBaud, which is obtained by internally dividing the 500 kHz TxC (and RxC) input by 16. Transmitter data out is buffered by U311-8, which can sink up to 16 mA. If transmit data is low, current flows from +5V through R313, over pin 4 of both connectors, through R315 and optisolator LED U317, and returns over connector pins 5. The output of the optoisolator is normally pulled high by R333. But with the LED on, the isolater switch turns on, sending a low to the UART reeiver input. Notice that while the MIDI OUT jack is grounded to the chassis, MIDI IN is not. This allows the cables to provide their shielding services without creating ground loops.

When the UART has not received data, its pin 7 -IREQ is high. Each 500 kHz clock pulse on NMI FF U319-3 clocks this signal, -NMI false, through U319-5 to the CPU, where it has no effect. But when a complete serial byte is received, -IREQ goes low, indicating the receive register is holding data. This data needs to be retrieved, so that the next byte of data can be received. -NMI is now true and it will take at most 2 us to be clocked through the NMI FF. When it sees the negative edge on its pin 17, the CPU completes its current instruction, makes a note to itself where it was in the program, then branches to the routine which handles the UART input.

When the data is handled, the CPU will prepare for the next MIDI interrupt by clearing the NMI FF with the -NMI CLR pulse from U326 MISC LATCH (pin 10). Whenever the CPU is unable to respond to the MIDI, for example, when tuning, it inhibits the NMI FF with this bit.

2-8 LED MATRIX

The LED matrix is driven by data latched by strobes +CSO0 and -CSO1 (Chip Select Output) which are produced by U322 Output Port Decoder.

Because the LEDs are strobed at the constant 5-ms interrupt rate, they don't flicker. Please see schematic sheet A (SD600-1). There are three multiplexed LED columns. Two columns each contain the segments of DS101, including the decimal point for Edit mode indication. The separate LEDs for the mebrane switches fill the rest of the matrix.

The matrix technique of lighting LEDs is widely used, so we'll just say that bits representing LEDs to be lit in one row are latched off the data bus by U102 and U103, when clocked by -CSO1. The latched bits turn on the transistors in array QA101 (plus Q101). Only the LEDs in the column enabled exclusively by Q102-Q104 will light. These bits are latched by the -CSO0 strobe.

2-9 SWITCH MATRIX

The matrix switch scanning method is also widely used. Strobe CSO0 is used to latch four-bit numbers to decoder U104. This 4514 sequentially applies high voltages to each row of switches in the matrix (connected to S0-S15). Figure 2-5 shows two of these strobes.

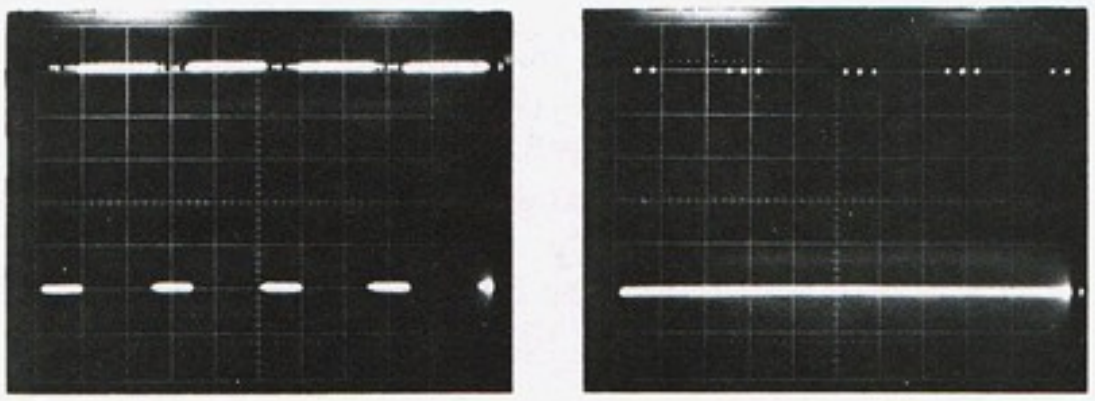

V: 1V/div
H: 2 ms/div

Figure 2-5
STROBES

A
S0 SWITCH

B
S8 KEYBOARD

The -CSI1 (Chip Select Input) strobe then enables U105/U106 bus drivers, which place the data coding held switches in the current row on to the bus.

SA2 keyboard is the most obvious switch array. Each key is actually a SPST momentary switch. The diodes wired throughout allow n-key rollover (the pressing of any number of keys) by isolating each switch. If the diodes were not present, signals from closed switches would pull other rows high.

The switch elements of SA1 membrane panel are also SPST momentary but are not protected from n-key rollover by diodes. Instead the whole pad is isolated from the rest of the matrix by D101 - D108.

Because the synthesizer switches are slide (rather than having LEDs), they can't show their programmed position, except by being toggled. One switch on PCB 2 is wired into this part of the matrix (see sheet B, SD600-2).

2-10 SWITCH LATCHES

We have seen data latched off the bus to drive the LED matrix, and to provide strobe signals for the switch matrix. The signals which control analog switches in the synthesizer form a third type of output. In Preset mode these switch signals are set by the current program. In Edit or Manual Modes these signals directly follow their corresponding switch on the control panel.

See Sheet D (SD600-3, 2/2). It was already mentioned above that latch U331 is held reset during power up, to discourage random sounds. In normal operation, data for this latch is strobed with -CSO3. The seven signals cross over TB305 to (turn to Sheet E, SD600-4, 1/4). Following TB404 (to the right), U404 shifts four of the switch signals

from +5-V to +15-V level. The corresponding destination switches operate at higher voltage to accomodate high-level synthesizer signals. These four signals, and the three unshifted switch signals each have six destinations: one analog switch on each voice.

2-11 DAC and CV DEMULTIPLEXER

In addition to providing switch signals, the computer of course provides CVs to the synth, in the following way.

Refer to Sheet D. U328, clocked by -DAC HI, latches the six most-significant (MS) DAC bits. U327 and U324 form the latch for the eight LSBs, clocked by -DAC LO. The MS latch is always used, but the LS latch is only used to provide the resolution needed for oscillator frequency CVs. The fourteen latched DAC bits cross over from TB303 on PCB 3 to drive the DAC on PCB4. See Sheet E. U401-U403 buffer the bits and invert them to the active-low inputs which U405 DAC requires.

The DAC has a basic range from 0 to 4.9V, adjusted by R4333. (This trimmer is not used on early production units which have a Burr-Brown DAC71.) U414 converts the output current to voltage, Vdac.

During each interrupt cycle Vdac assumes the value of each S/H, and of the wheel and control which are being read. The CV demultiplexer (DMUX) is synchronized so that Vdac strobes the correct S/H at the precise time that it assumes the corresponding value. Figure 2-6 shows Vdac.

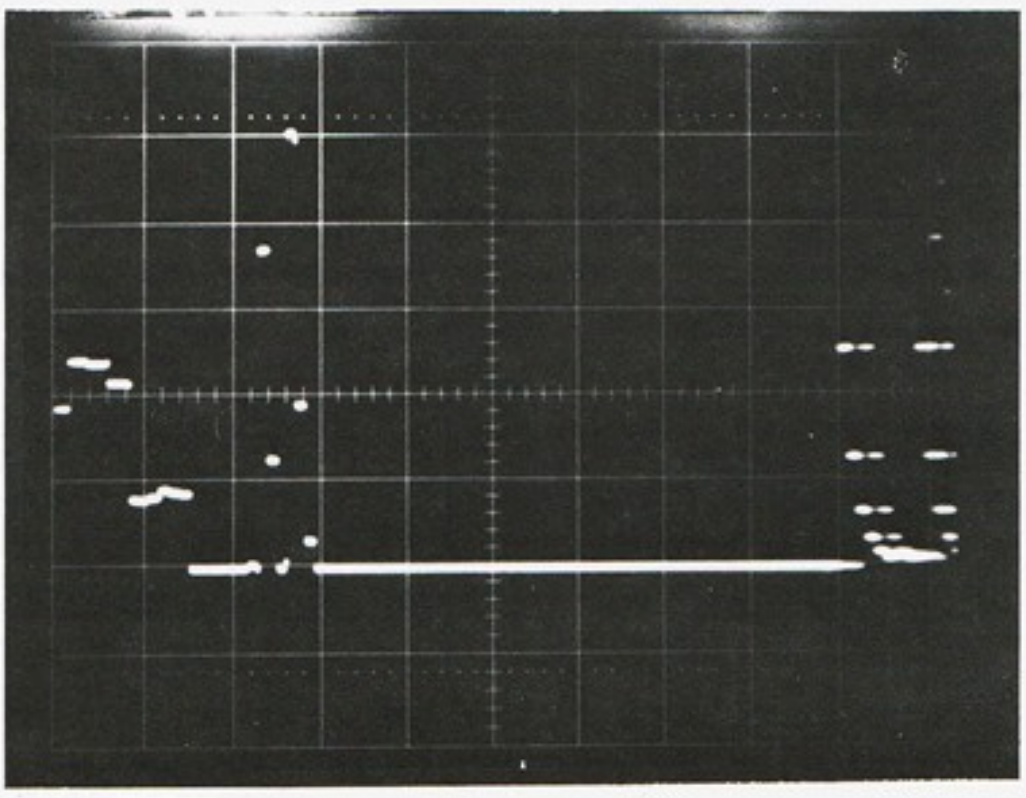

V: 1V/div
H: .2 ms/div

Figure 2-6
VDAC, FACTORY PROGRAM 00

To obtain a better understanding of the DAC function, it will be useful to actually observe Vdac on an oscilloscope, while exercising various keyboard and control operations. For example, the individual FIL and AMP CVs will be seen to follow envelope movements. The effects of various modulation paths can be easily demonstrated.

The two sets of seven voltages at the end of the strobe are the wheel and control successive-approximation voltages used to detect changes in position. This technique will be discussed with the ADC.

U414 drives four CV DMUX ICs, and the ADC comparator (see below). Referring for a moment to sheet D, U329 (-CSO5) and ½U330 latch seven CV DMUX ADDRESS bits. This data selects the destination S/H for each Vdac value. One of eight S/H on each 4051 is selected with lines ABC. The I0-I3 (Inhibit) lines go low to enable the active DMUX chip. (Vee of each 4051 is operated from -5V because this lowers the operating impedance of the analog switches in the 4051. Vdac is always positive.)

There are two main types of CVs: polyphonic and monophonic. Polyphonic CVs are those which vary with the keyboard. In this class are the six separate OSC A, OSC B, filter, and amplifier CVs which are demultiplexed by U415, U416, and U417. Of the eight CVs demultiplexed by U418, six are monophonic, because they each go to all six voices. Similar to the switch bits, these voltages are basic program parameters.

The basic S/H circuit for each of these consists of a low-leakage capacitor and a BIFET opamp, which has an extremely high input impedance. The 4051 momentarily connects Vdac to the S/H. The capacitor charges to the value of Vdac. It retains this value while the demultiplexer strobes all the other S/Hs.

Figure 2-7 illustrates the output waveform of a typical S/H. Pure dc is desired. The output from a typical S/H should basically not "droop" during the 5 ms interrupt cycle. When troubleshooting the synthesizer for malfunctions affecting all voices, it is a often a good idea to start by checking appropriate mono S/Hs.

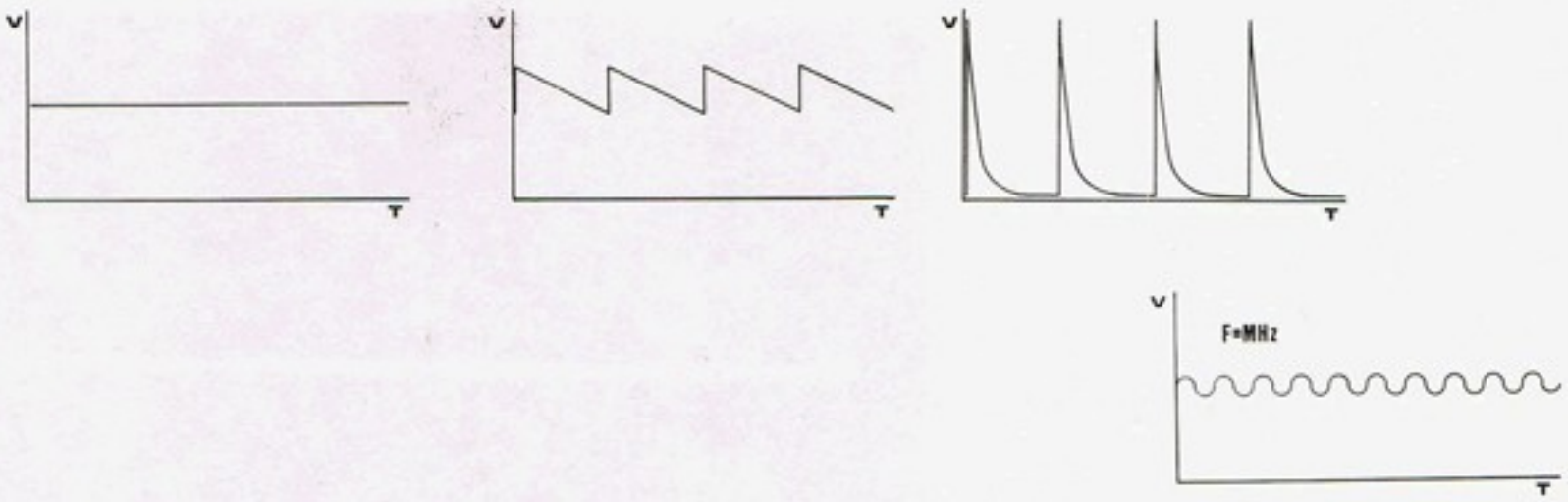

GOOD BAD BAD BAD

Figure 2-7
SAMPLE/HOLD WAVEFORMS

The S/Hs for PW A and B CV S/Hs have some added resistors. R409-411 expand the voltage range from below 0 to above +5, to ensure enough range to fully cutoff the pulse width. R415 and C443 form a filter for digitization noise. This noise is the audible result of the dynamic CV having to "staircase" rather then smoothly slew between the strobed values. The filter removes the most objectionable part of the staircase edges.

The MVOL CV is set to 0 during TUNE. Otherwise it tracks the VOLUME knob. The EXT FIL EN CV is actually used as a gate which disables the FILTER CV IN during TUNE. Otherwise it constantly strobes the FILTER CV IN to the filters.

2-12 POT MULTIPLEXER and ADC

When a program is selected, equivalent pot values are transferred from the program area of RAM to a "Scratchpad" area, from which the values are output as appropriate CVs. Also in Scratchpad the CPU maintains another table of the pot values corresponding to wherever the knobs currently happen to be set.

During each loop the CPU checks either the PITCH or MOD wheel and one other knob for motion. Because the interrupt loop is 5 ms, each wheel is sampled every 10 ms. This rate is fast enough to detect typical real-time performance. If a difference is detected in the PITCH wheel, oscillator pitches are raised or lowered accordingly. A difference in the MOD wheel increases or decreases modulation amounts.

Provided no knobs are moving, each of the 25 other pots is scanned every 125 ms. If one of these knobs is moved, the CPU reads it in successive loops, until the knob stops moving. When the knob is moved to the programmed value, this activates Edit mode. Once the knob has "found" the current program value, further pot motion will also update the main Scratchpad table, thus change the sound.

See Sheet A (SD600-1). Clocked by -CSO2, latch U107 provides pot addresses to multiplexer (MUX) U108 and over TB201 to U201 (see Sheet B). These addresses sequentially select which pot connects to the Vmux output--that goes to the ADC comparator. Figure 2-8 shows a typical Vmux waveform.

V: 1V/div
H: 2 ms/div

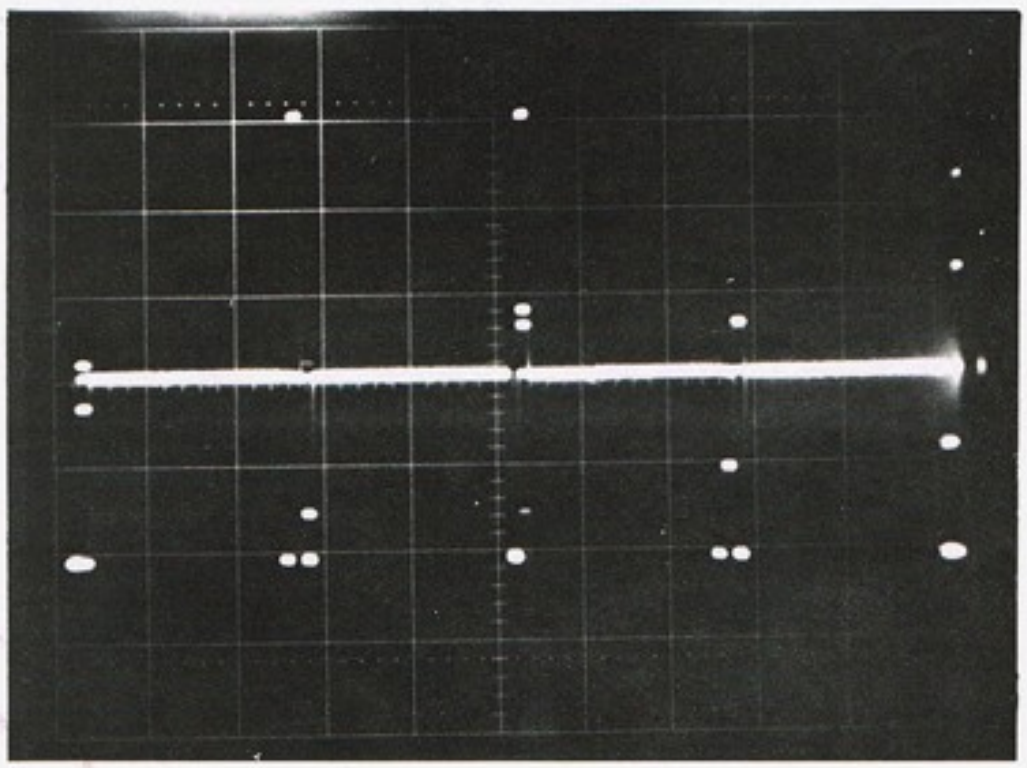

Figure 2-8
VMUX, PITCH WHEEL CENTERED

The POT MUX has its own analog power supply. +15V is supplied through TB101. U109 is a 1% precision 5V regulator which gaurantees that the POT MUX reference voltage is at least 4.95V. The wheels are operated from the +15V line. Pull-ups R101 and R102 insure that the wipers cross through the 5V point, so they are fully digitized. D123 and D124 clamp the PITCH and MOD wheel voltages to not exceed the tolerance of U108.

For example, when it is the MOD wheel's turn to be read, the CPU (through U107) sets POT MUX address lines PM1, PM2 and -PEN0 high, and the rest low. These select the Y6 input on both 4067s, but enable only U108. Vmux now equals the MOD wheel voltage sent across TB101 to the ADC on PCB 4.

See Sheet E. Vmux is applied to the non-inverting input of U419. The output of the comparator is polled by the miscellaneous input driver, U325, (-CSI0, see Sheet D, SD600-3 2/2). The system performs a seven-bit successive approximation routine to convert the current wheel or knob position to a digital number (the PITCH wheel is digitized to eight bits). This is done by first setting the most significant (seventh) DAC bit and sampling the comparator output. If the comparator output is high, then the DAC voltage did not exceed the wheel voltage, so that bit is left set. It then tests each bit and leaves each one set which does not cause the comparator output to go low. This takes seven (or eight) separate output operations. (Refer to Figure 2-2.)

Because the front panel operates from a minimum 4.95V and the DAC is set to 4.9V, the pots are gauranteed to have maximum conversion range (111 1111). It is therefore normal for pots to "max out" as low as 8 on the dial.

2-13 THE SYNTHESIZER

How the microcomputer system processes the controls into CVs and switch bits has been described. The synthesizer converts these control signals into audio.

Each of six voices contains two CEM 3340 voltage-controlled oscillators (VCOs), a few analog switches and voltage-controlled amplifiers (VCAs), and a CEM 3372. The voices have been considerably simplified by the integration of voltage-controlled mixer, filter, and amplifier functions into this IC.

The VCOs, such as U428 OSC 1A (see sheet F), operate in exponential (as opposed to linear) control mode, scaled at 1/2 volt per octave. This means an OSC FREQ CV change of 1/2V produces a pitch change of one octave, and is a departure from our previous practice of using 1V/octave. Doubling the sensitivity of the oscillators allows the basically 5-V DAC to still control a ten (instead of five) -octave range. Actually OSC A and B range nine octaves, following up to 2.5V (five octaves) provided by the keyboard and up to 2V (four octaves) provided by the FREQUENCY knobs.

The VCO itself is of course a complex of other circuits. Basically, the summed CV drives an exponential control current generator, which charges an external timing capacitor. The increasing positive charge produces the ascending portion of the triangle wave by direct integration. When this charge reaches a specific level, a comparator switches-in a discharge path for the capacitor, producing the descending portion of the triangle wave. The sawtooth is obtained from the triangle via another comparator and switch. The pulse wave is created by a comparator which toggles as the sawtooth level matches the pulse width CV input.

Pitch accuracy amid varying temperatures is the main challenge of VCO design. As it heats and cools, the exponential control current generator charges the timing capacitor more or less quickly, altering the oscillation period (pitch). The stability of the Prophet-600s oscillators results from the 3340 including a temperature compensation (TEMPCO) circuit which has the same temperature characteristics as the exponential generator, but which counteracts drift by making the necessary adjustment through the precision multiplier stage. (The oscillator accuracy depends on the TUNE system.)

Referring to the Voice 1 schematic, R424 adjusts OSC 1A scale by determining the current gain of the precision multiplier through the TEMPCO circuitry. Pull-down R423 helps with stability. On the SUM input, R447 sets the basic range of operation, and R448/C463 compensate the precision multiplier. High-voltage switch U429-1 applies the P-MOD OSC A CV, when enabled. R449 (pin 14) converts the current output of the precision multiplier into a drive voltage for the exponential current generator. R450 (pin 13) sets the reference current for the exponential generator. R451/C464 compensate the generator. C465 (pin 11) is the timing capacitor which is the main determinant of oscillator frequency range. It is a polystyrene type for low leakage and best stability.

When closed, the OSC A SYNC switch U429-11 couples the falling edge of OSC B's sawtooth through C466 and R453, which turns on Q401. The internal sawtooth buffer connected to pin -10 is thus pulled down to -5V, resetting it. This hard-syncs OSC A to B. The S SYNC output through R452 merely provides a bias for the transistor.

Except for sync, OSC B is implemented identically. Further details of the CEM 3340 can found in the Data Sheets section.

Notice that there is no analog switch on the A or B pulse outputs, pin 4. To turn the pulse off the computer simply drives the pulse width all the way to dc. Because of interaction with the sync circuit, the computer must use +5V to disable the OSC A pulse. For OSC B, the pulse disable voltage is 0V so that a dc offset is not created for either POLY-MOD destination.

The sawtooth waveshape switches operate from +15V, to pass the 10V-level sawtooth. The triangle switches operate at +5V. To prevent frequency shift, these are arranged to present a constant impedance. When off, U430-1 connects the output to ground through R433. OSC B has two destinations: audio and POLY-MOD. At U430-12 R454 approximates the parallel resistance of R435 and R434. The -5V applied to the 4053s lowers their input impedance. Also with regard to switches, sheet E (at the right) shows D409 and R406 creating a -.6V bias for all 4016-type switches, allowing them to pass slightly negative voltages

The OSC B POLY-MOD level is controlled by VCA U434-2, buffered, and switched to OSC A FREQ by U429-1, or to the filter by U430-4.

2-14 INTEGRATED MIXER/FILTER/AMPLIFIER

The oscillator outputs are ac-coupled to VCAs in the 3372 which are controlled by separate VOL A and VOL B CVs. These voltages determine the MIX levels to the filter.

There is an interesting way the 3372 can fail which makes a simple situation look like a major calamity. All the MIX A and B CVs are common. Therefore if one of these inputs shorts internally to ground, all the OSC As or Bs (or both) will be disabled. To isolate the bad 3372 in this case you would probably measure the CV while alternately removing and reinstalling 3372s. (When the CV rises to normal you've found the bad IC.)

The filters are scaled at 1/4V/octave, to enable the various filter control sources--keyboard, LFO, ENV AMOUNT, CUTOFF to have full range. Filter frequency CV input is treated as a summing node. R463 FILTER 1 SCALE trims the input dividing resistors. R468 sets the basic filter range. R470 contributes any external voltage. When POLY-MOD FILT (R462) is off, U430 connects its output (pin 4) to ground (pin 5).

The FIL 1 CV from the S/H undergoes some local filtering for digitization noise. D401, D402, R417 and C447 are chosen such that as long as the difference between the S/H and the charge on C447 is less than 600 mV, C447 will charge or discharge through R417. When the difference is greater than this, it will be conducted through the diodes (which takes less time). This two-speed filtering allows enough static filtering for acceptable noise without excessively distorting shorter envelopes.

CAPS 1 through 4 (C458-61) determine the frequency of each filter pole. The output from the fourth pole (pin 17) is ac-coupled to both a resonance VCA (pin 11) and the final VCA (pin 12). Pin 10 is the RESONANCE CV input. The resonance amplifier is internally compensated to provide a fuller sound than our previous filters.

Finally, there is the amplifier CV. The network D410/D411, R444/R445 and C462 are another filter for digitizing noise which basically offers two different slew rates, depending on the level of the change. The Zener diodes are rated at 2.4V. When the amplifier envelope is moving slowly, the difference between the S/H output and pin 13 will rarely exceed 2.4V. The diodes do not conduct, so the CV is slewed by R445/C462. When the difference exceeds 2.4V, one of the diodes switches on R444 in parallel, which considerably accelerates the slewing.

2-15 AUDIO OUTPUT

Referring to Sheet E, the voice outputs are summed by U467-7, which drives the Final VCA and Tune Comparator.

The VOLUME CV to U458-2 is divided by 2 by R4221/R4220. Pull-down R4222 insures the CV goes below 0 for complete shutoff. C4146 provides filtering for digization noise on the MVOL CV.

U452 is our standard 600-Ohm output circuit.

2-16 TUNE

The Tune system is responsible for the entire performance for the instrument in the sense that without its corrective influence, the twelve oscillators could not by themselves be expected to constantly stay in tune, due to temperature drift and component aging. Basically, each time the TUNE switch is pressed the system

precisely-measures oscillator and filter frequencies over a nine-octave range, and learns the exact CVs required to produce perfectly-tuned octaves. The differences between the theoretical and actual CVs which produce specific intervals are called tuning "biases." When playing, these biases are independently recalculated for each note and each oscillator, so that all twelve oscillators remain in tune throughout their range. In other words the computer measures the oscillator error at octaves, then while you play averages the error and corrects the note to which that oscillator happens to be assigned.

Unlike the earlier Prophets, the -600 contains no Tune Multiplexer. Instead, for tuning, the Final VCA is switched off and the computer selects the oscillators and filters which drive U466 TUNE COMPARATOR (see Sheet E). C4197 prevents oscillations. The comparator output crosses back to PCB 3 for counting by the Tune circuit (see sheet D).

The squared-up oscillator (sawtooth output is used) or filter pulses drive a flip flop, which clocks a programmable one shot which in turn gates an event counter. Frequency is measured in terms of ½-us events. There is a reference number of events (stored in EPROM) which will be produced by counting for one cycle at a specific octave, or for two cycles at an octave above that, or for four cycles at two octaves up, and so on. At each octave, the oscillator CV is adjusted by successive approximation until the total time count equals the reference count. When it does, the oscillator is in tune. It will take slightly more or less than exactly ½-volt to tune exactly one octave higher. This small but significant voltage difference is the bias which is averaged over the individual semitones.

For example, to tune OSC 1A to 261 Hz, the CPU first programs the Cycle Counter to count one cycle. The MSB of the DAC is set and this CV is applied to OSC 1A. OSC begins to generate a pitch in the upper middle of its range.

U326-15 latches out the gate (G) signal which enables the Cycle Counter. Then it outputs the -FFP pulse which by presetting Q, forces -Q low. This we call a "fake" clock pulse which is actually required for the Cycle Counter to begin its count accurately (due to the design of the counter itself). The FF is then cleared by the -FF CL bit, in preparation for the oscillator or filter pulse. The FF status is monitored by U325 MISC DRIVER.

FFD goes high, gating the oscillator pulse which is inverted through -Q. When the Cycle Counter receives the first low edge (after the fake clock), its output (pin 17) goes low. (Also monitored by U325.) This signal is inverted, enabling the Total Time counter, which begins to increment at the 2 MHz rate.

Since the Cycle Counter has been progammed for a terminal count of one, when it receives the next low edge, pin 17 goes high, stopping the Total Time counter. The Total Time register now holds the number of 2-MHz pulses equivalent to one oscillator cycle. The CPU sees that this specific total time count is way above the reference. This is because setting the MSB happens to drive the oscillator about an octave above the first-measured frequency of 261 Hz. So the computer turns off the MSB, sets the next significant digit, and measures the resulting count. It continues in this manner, setting each bit which does not cause the oscillator to overshoot its reference count.

One cycle at 261 Hz equals about 3.83 ms, which is about 76,628 ½-us periods. To be tuned at this octave (C3), the oscillator must generate this number. To tune the next higher octave (C4), the reference is halved to 38,314 and CV again set by successive approximation so that one cycle produces that count. For the higher octaves, C5 - C9, the reference count remains the same, while the Cycle Counter is reprogrammed for 2, 4, ...32 cycles. For the lower octaves, C0 - C2, the biases are actually extrapolated from the curve suggested by the higher-frequency measurements, because counting these slow waves would take an inconvenient amount of time.

Also to save time, the whole routine is only performed on power-up. After this, since the oscillators drift only slightly, retuning usually adjusts only the least-significant DAC bits.

or open resistor at output of analog switch

Because the oscillator signals pass through analog switches and the filter, problems in these audio paths may appear as tuning problems. For example, if an open analog switch disables the oscillator output to the tune comparator, the tune circuit will not see the correct number of pulses. This failure mode causes the computer to set the CVs for all C notes for that oscillator to maximum, while all other keys will sound in the sub-audio range. (To isolate the problem, try using the voice defeat: hold the key then press RECORD and PROGRAM SELECT 7.)

2-17 CASSETTE/MISC

Referring to Sheet D (SD600-2), U326-7 latches interface data which is ac-coupled to the TAPE output jack. TAPE IN is ac-coupled to U321 TAPE CPR, then read by miscellaneous driver U325.

U325 also accepts the CONTROL FOOTSWITCH and OSC SCALE test point inputs.

3-0 DOCUMENT LIST

DOCUMENT NUMBER	TITLE	SHEET CODE	PAGE
ID600-1	INTERCONNECTION DIAGRAM		3-3
PP600-1	PCB 1 DESIGNATOR MAP		3-4
SD600-1	PCB 1 SCHEMATIC	A	3-5
PP600-2	PCB 2 DESIGNATOR MAP		3-6
SD600-2	PCB 2 SCHEMATIC	B	3-7
PP600-3	PCB 3 DESIGNATOR MAP		3-8
SD600-3 1/2	PCB 3 SCHEMATIC	C	3-9
SD600-3 2/2	PCB 3 SCHEMATIC	D	3-10
PP600-4	PCB 4 DESIGNATOR MAP		3-12
SD600-4 1/4	PCB 4 SCHEMATIC	E	3-13
SD600-4 2/4	PCB 4 SCHEMATIC	F	3-14
SD600-4 3/4	PCB 4 SCHEMATIC	G	3-15
SD600-4 4/4	PCB 4 SCHEMATIC	H	3-16

Modification To VCO Circuits

For correct scaling, all Sequential synthesizers with Rev G CEM3340 VCO chips need the 26.7K 1% resistors (part# R-146) in the VCO circuits to be replaced with 25.5K 1% resistors (part# R-516). This change may affect tuning of Prophet-5, -10, -600, and -T8s.

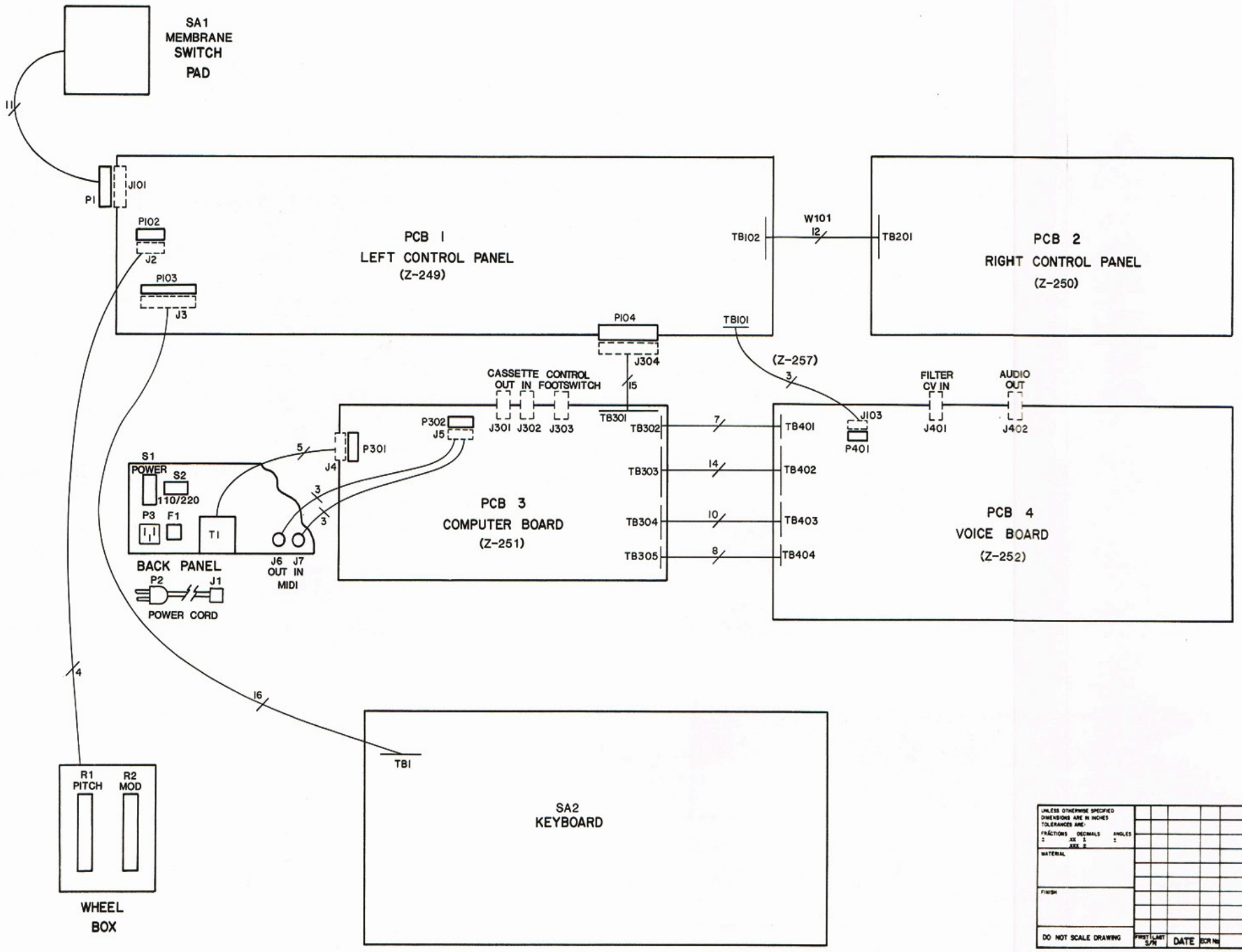

3-3

UNLESS OTHERWISE SPECIFIED DIMENSIONS ARE IN INCHES TOLERANCES ARE: FRACTIONS ± DECIMALS .XX ± .XXX ± ANGLES ±

MATERIAL

FINISH

DO NOT SCALE DRAWING

LTR	DATE	REVISION
J		
H		
G		
F		
E		
D		
C		
B		
A		

SEQUENTIAL CIRCUITS INC

APPROVALS	DATE
DWN Ron Chaffee	1-6-83
CHK	
DSN	
PEN	
ISS	

TITLE: INTERCONNECT DIAGRAM

SIZE C | MODEL No. 600

DOCUMENT No. ID600-1 | REV A

SCALE | SHEET 1 OF 1

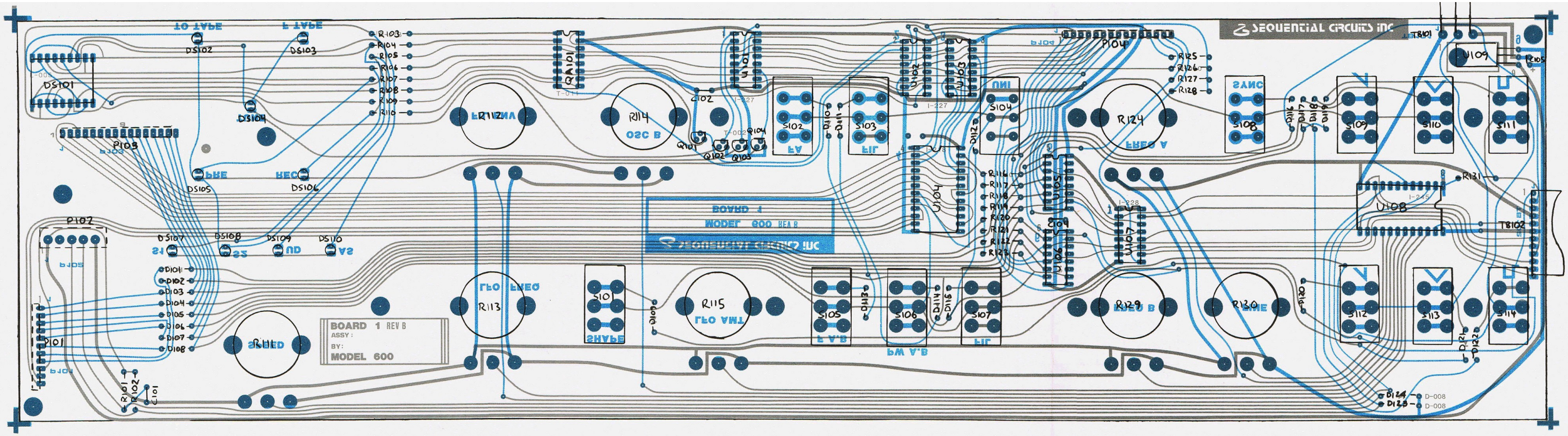
SEQUENTIAL CIRCUITS INC
BOARD 1 REV B
ASSY :
BY:
MODEL 600
DS101
DS102
DS103
DS104
DS105
DS106
DS107
DS108
DS109
DS110
P101
P102
P103
P104
R101
R102
C101
R103
R104
R105
R106
R107
R108
R109
R110
R111
R112
R113
R114
R115
R116
R117
R118
R119
R120
R121
R122
R123
R124
R125
R126
R127
R128
R129
R130
R131
Q101
Q102
Q103
Q104
Q105
Q106
Q107
Q108
Q109
Q110
Q111
Q112
Q113
Q114
Q115
Q116
Q117
Q118
Q119
Q120
Q121
Q122
Q123
Q124
Q125
Q126
Q127
Q128
Q129
Q130
Q131
Q132
Q133
Q134
Q135
Q136
Q137
Q138
Q139
Q140

LED MATRIX

SWITCH MATRIX

MYLAR CONTROL PANEL SA1

POT MUX

SA2 KEYBOARD

SPARES:

LAST	NOT USED
C105	
D124	
DS110	
J101	
P104	
Q104	
QA101	
R131	
S114	
U109	
W101	

SEQUENTIAL CIRCUITS INC

DWN	DAVE	11/2/82	TITLE	BOARD 1 SKI
CHK			SIZE	MODEL No 600
DSN			DOCUMENT No	SD600-1 REV B
PEN			SCALE –	SHEET 1 OF 1
ISS				

4/15/83 ADDED D123, D124

3-5

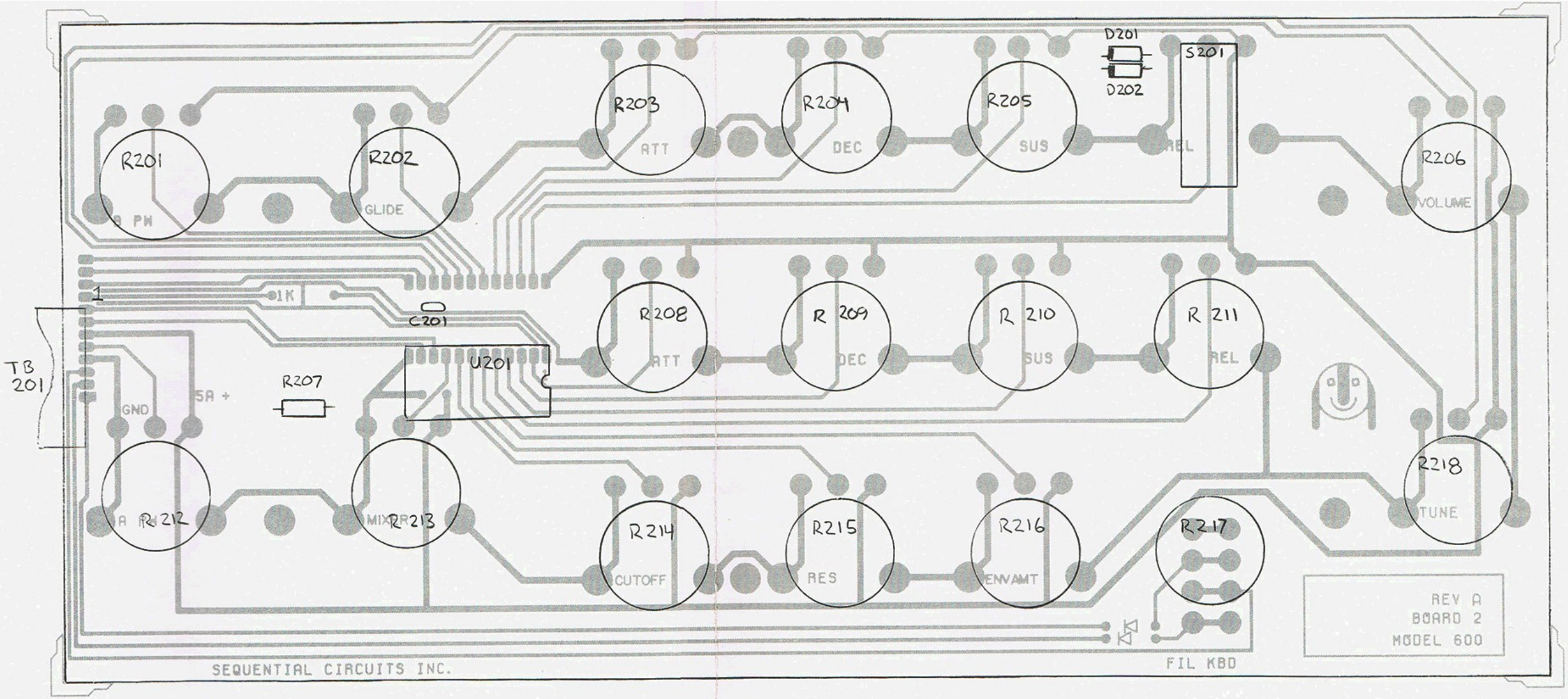

3-6

UNLESS OTHERWISE SPECIFIED DIMENSIONS ARE IN INCHES TOLERANCES ARE: FRACTIONS ± DECIMALS .XX ± .XXX ± ANGLES ±					J
					H
					G
MATERIAL					F
					E
					D
FINISH					C
					B
					A
DO NOT SCALE DRAWING	FIRST S/N	LAST S/N	DATE	ECR No	REVISION	LTR

SEQUENTIAL CIRCUITS INC

3051 NORTH FIRST STREET · SAN JOSE · CALIFORNIA · (408) 946-5240

APPROVALS	DATE
DWN DAVE	
CHK	
DSN	
PEN	
ISS DMS	11-22-82

TITLE: BOARD 2 DESIGNATOR MAP

SIZE: B | MODEL No.: 600

DOCUMENT No.: PP-600-2 | REV: A

SCALE 1:1 | SHEET 1 OF 1

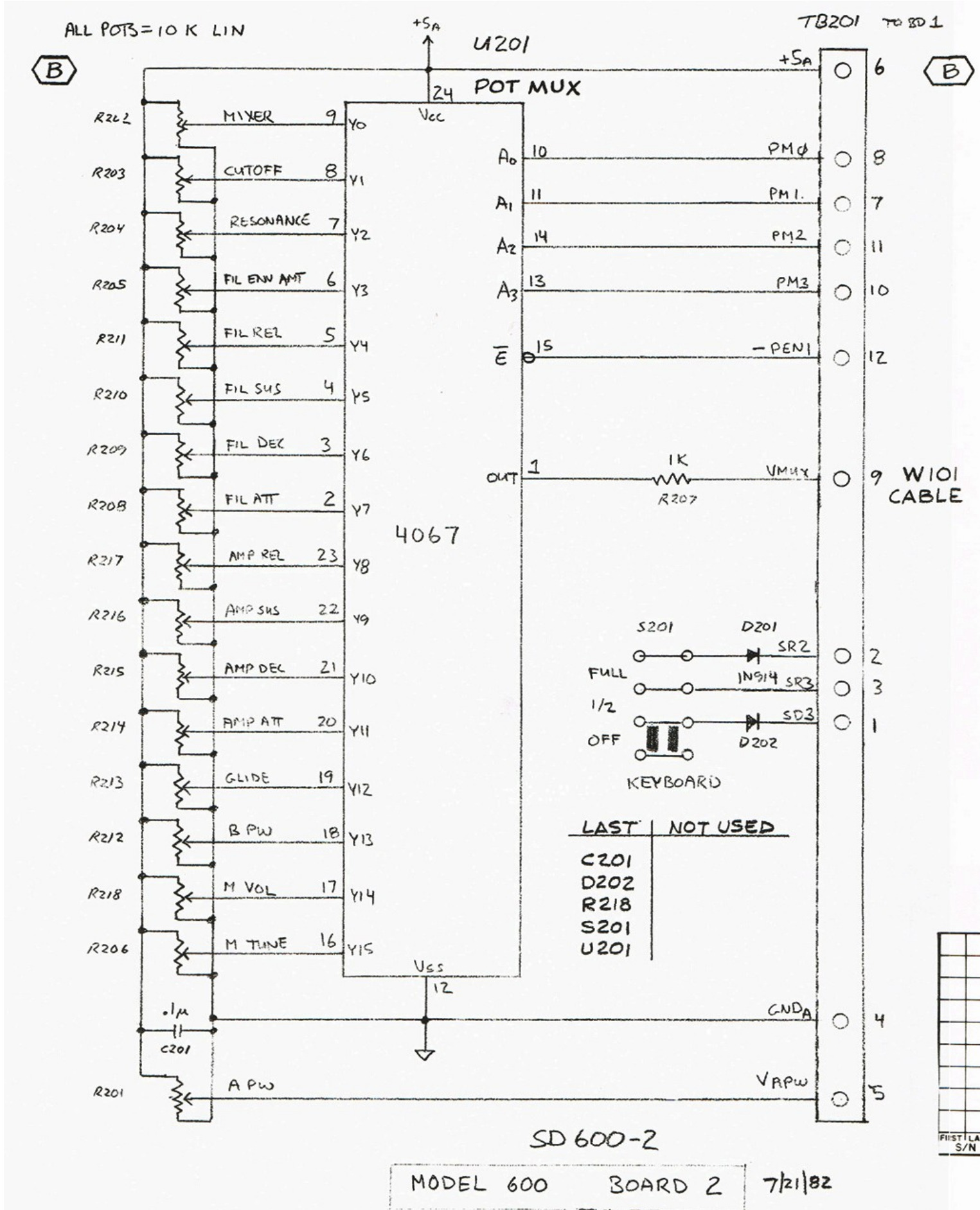

SD 600-2

MODEL 600 BOARD 2 7/21/82

3-7

					J	SEQUENTIAL CIRCUITS INC
					H	
					G	APPROVALS / DATE
					F	DWN DAVE 7/21/2
					E	CHK
					D	DSN
					C	PEN
					B	ISS DMS 11-22-82
					A	
FIRST / LAST S/N	DATE	ECR No	REVISION		LTR	

TITLE: BOARD 2 SCHEMATIC
SIZE: B | MODEL No: 600
DOCUMENT No: SD 600-2 | REV: A
SCALE | SHEET 1 OF 1

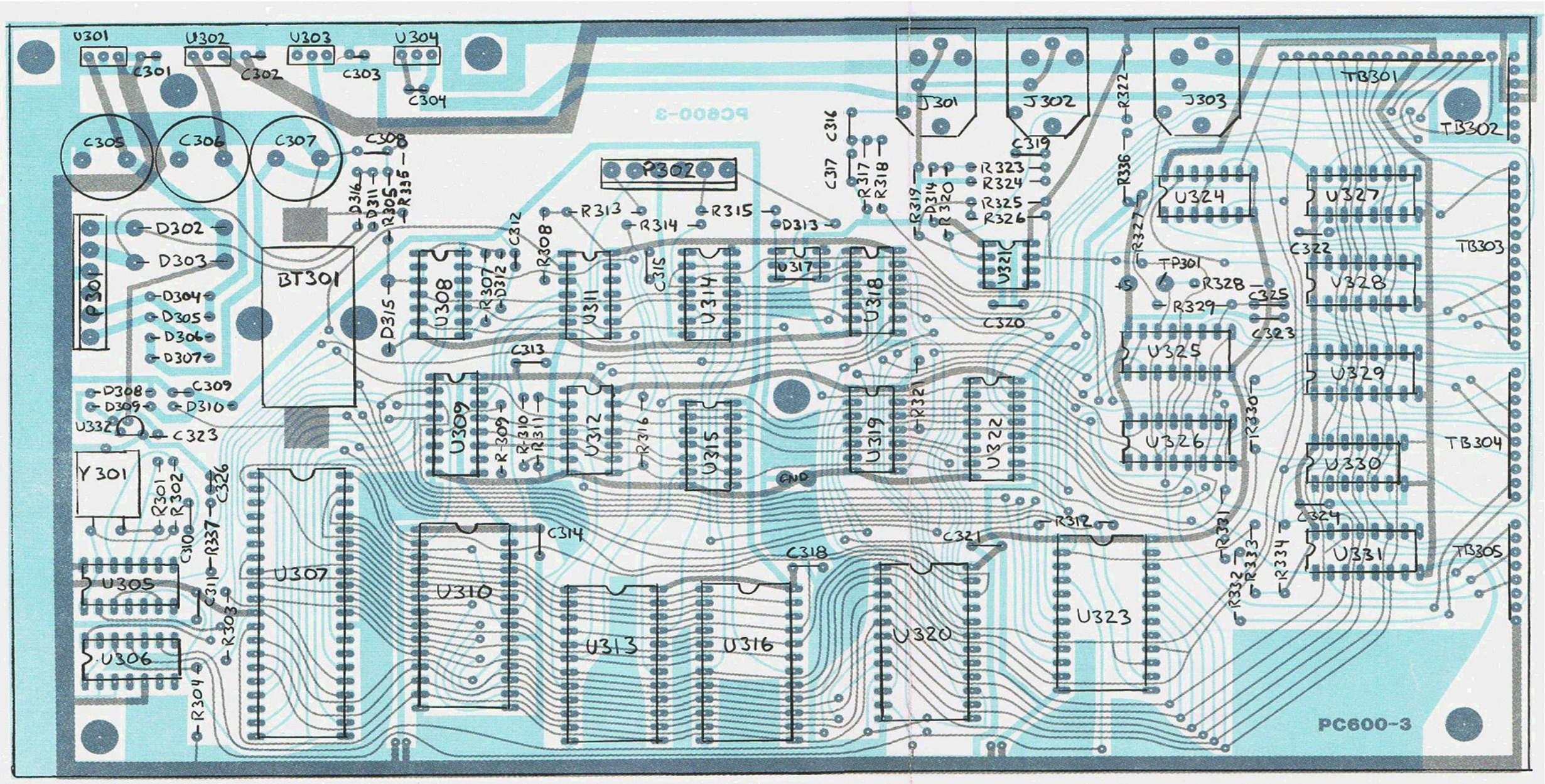

3-8

UNLESS OTHERWISE SPECIFIED DIMENSIONS ARE IN INCHES TOLERANCES ARE: FRACTIONS ± DECIMALS .XX ± .XXX ± ANGLES ±						J
						H
						G
MATERIAL						F
						E
					ADDED R-337; C326	D
FINISH			4.15.83		ADDED: D315, 316; R335; REMOVED R306	C
						B
DO NOT SCALE DRAWING	FIRST S/N	LAST S/N	DATE	ECR No	REVISION	A / LTR

SEQUENTIAL CIRCUITS INC

APPROVALS	DATE
DWN DAVE	11/3/82
CHK	
DSN	
PEN	
ISS DM S	11/22/82

TITLE: BOARD 3 DESIGNATOR MAP

SIZE: B | MODEL No.: 600

DOCUMENT No.: PP-600-3 | REV: D

SCALE 1-1 | SHEET 1 OF 1

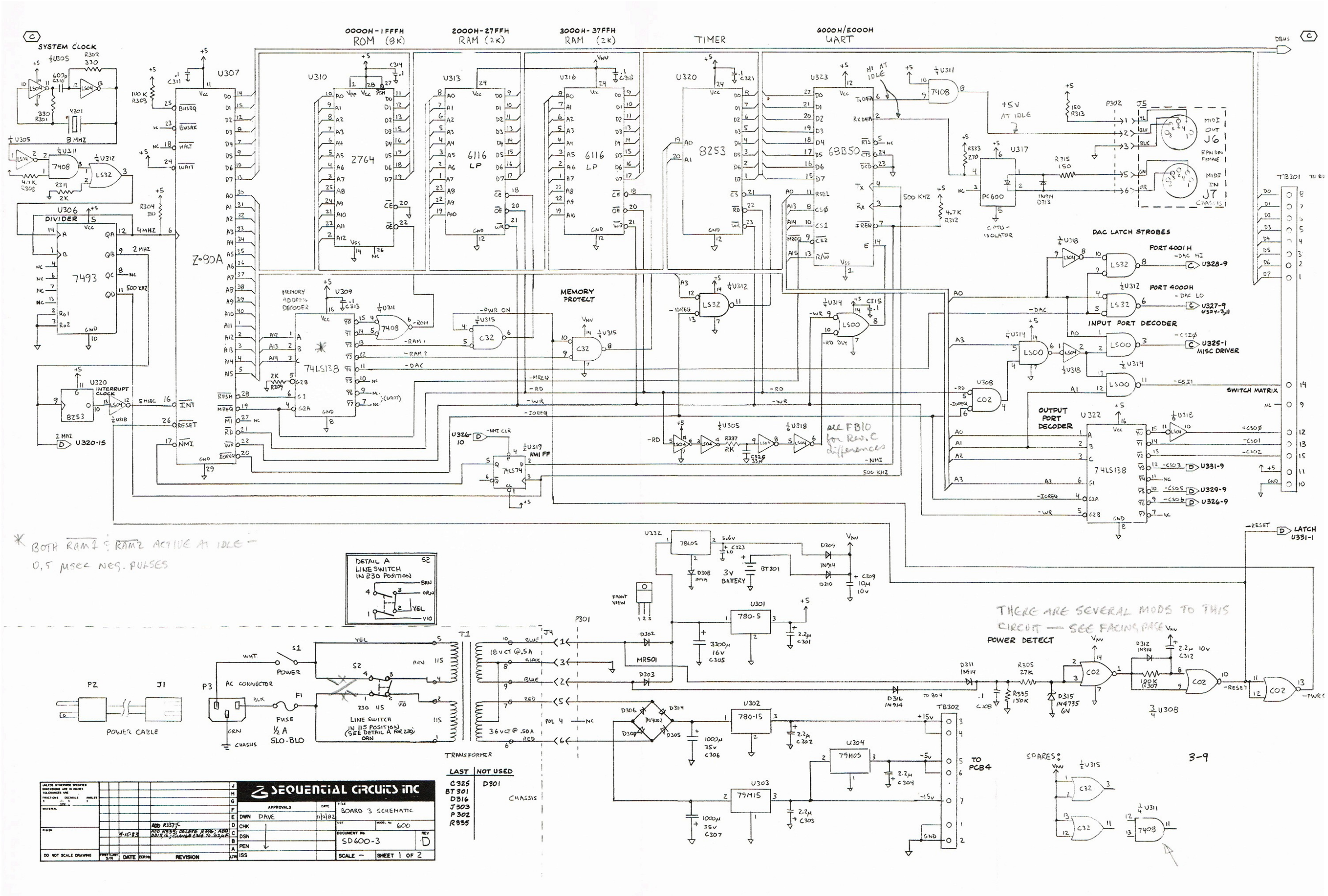
SYSTEM CLOCK
0000H-1FFFH ROM (8K)
2000H-27FFH RAM (2K)
3000H-37FFH RAM (2K)
TIMER
6000H/E000H UART
DBUS
U307
Z-80A
U310
2764
U313
6116 LP
U316
6116 LP
U320
8253
U323
68B50
U317
PC600
OPTO-ISOLATOR
U306
DIVIDER
7493
U320
INTERRUPT CLOCK
8253
U320-15
MEMORY ADDRESS DECODER
U309
74LS138
MEMORY PROTECT
U326-10
U319
NMI FF
74LS74
DAC LATCH STROBES
PORT 4001H
PORT 4000H
INPUT PORT DECODER
U325-1
MISC DRIVER
OUTPUT PORT DECODER
U322
74LS138
SWITCH MATRIX
TB301
TO BD
LATCH U331-1
* BOTH RAM1 & RAM2 ACTIVE AT IDLE — 0.5 μsec NEG. PULSES
DETAIL A LINE SWITCH IN 230 POSITION
S2
FRONT VIEW
U332
78L05
3V BATTERY
BT301
U301
780-5
THERE ARE SEVERAL MODS TO THIS CIRCUIT — SEE FACING PAGE
POWER DETECT
P301
J4
18VCT @ .5A
36VCT @ .50A
MR501
P2
J1
POWER CABLE
P3
AC CONNECTOR
S1
POWER
F1
FUSE
½ A SLO-BLO
LINE SWITCH IN 115 POSITION (SEE DETAIL A FOR 230)
T1
TRANSFORMER
U302
780-15
U303
79M15
U304
79M05
TB302
TO PCB4
SPARES:
U308
U315
U311
7408
3-9
LAST | NOT USED
C325 | D301
BT301
D316
J303
P302
R335
CHASSIS
SEQUENTIAL CIRCUITS INC
BOARD 3 SCHEMATIC
DWN DAVE
11/2/82
600
SD600-3
D
SCALE —
SHEET 1 OF 2
DO NOT SCALE DRAWING
4-15-83
ADD R337; ADD R335; DELETE R306; ADD D315/16; CHANGE C308 TO .02μF
REVISION

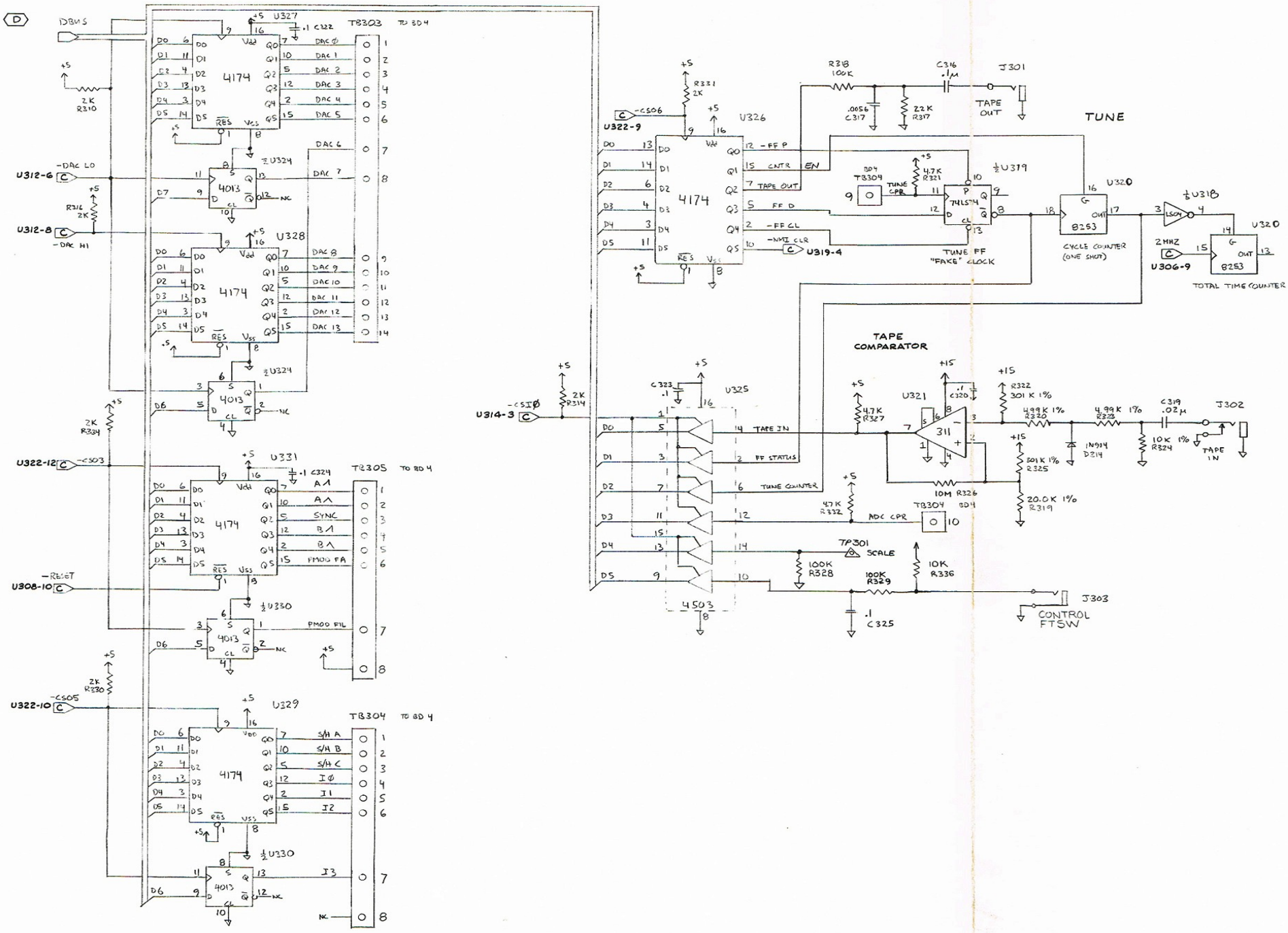

3-10

UNLESS OTHERWISE SPECIFIED DIMENSIONS ARE IN INCHES TOLERANCES ARE FRACTIONS DECIMALS ANGLES .XX .X						J
MATERIAL						H
						G
FINISH						F
						E
						D
						C
						B
DO NOT SCALE DRAWING	PREV'T/ASSY S/N	DATE	ECR No	REVISION		A

SEQUENTIAL CIRCUITS INC

APPROVALS	DATE	TITLE
DWN DAVE	11/2/82	BOARD 3 SCHEMATIC
CHK		SIZE / MODEL No 600
DSN		DOCUMENT No SD 600-3 REV D
PEN		
ISS		SCALE — SHEET 2 OF 2

"REDUCE TO 15.80 " "

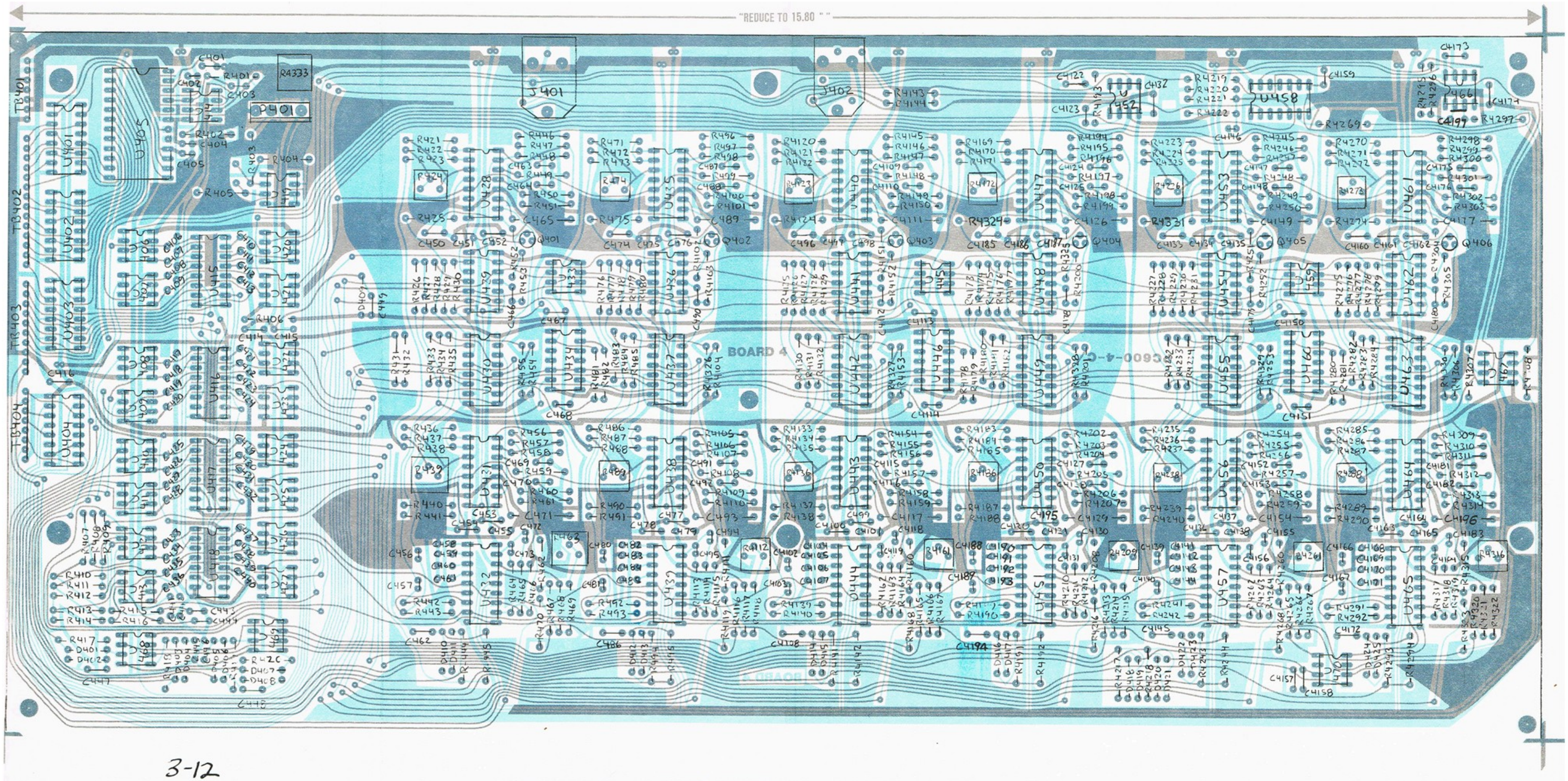

3-12

UNLESS OTHERWISE SPECIFIED DIMENSIONS ARE IN INCHES TOLERANCES ARE: FRACTIONS ± DECIMALS .XX ± .XXX ± ANGLES ±					J
					H
					G
MATERIAL					F
		9-16-82	R-005	-A	E
					D
FINISH					C
					B
					A
DO NOT SCALE DRAWING	FIRST / LAST S/N	DATE	ECR No.	REVISION	LTR

SEQUENTIAL CIRCUITS INC

APPROVALS	DATE
DWN DAVE	11/11/82
CHK	
DSN	
PEN	
ISS OMS	11-22-82

TITLE: BOARD 4 DESIGNATOR MAP

SIZE | MODEL No. 606

DOCUMENT No. PP600-4 | REV E

SCALE 1-1 | SHEET 1 OF 1

LAST USED	NOT USED
C4197	R4332
R4333	
U467	

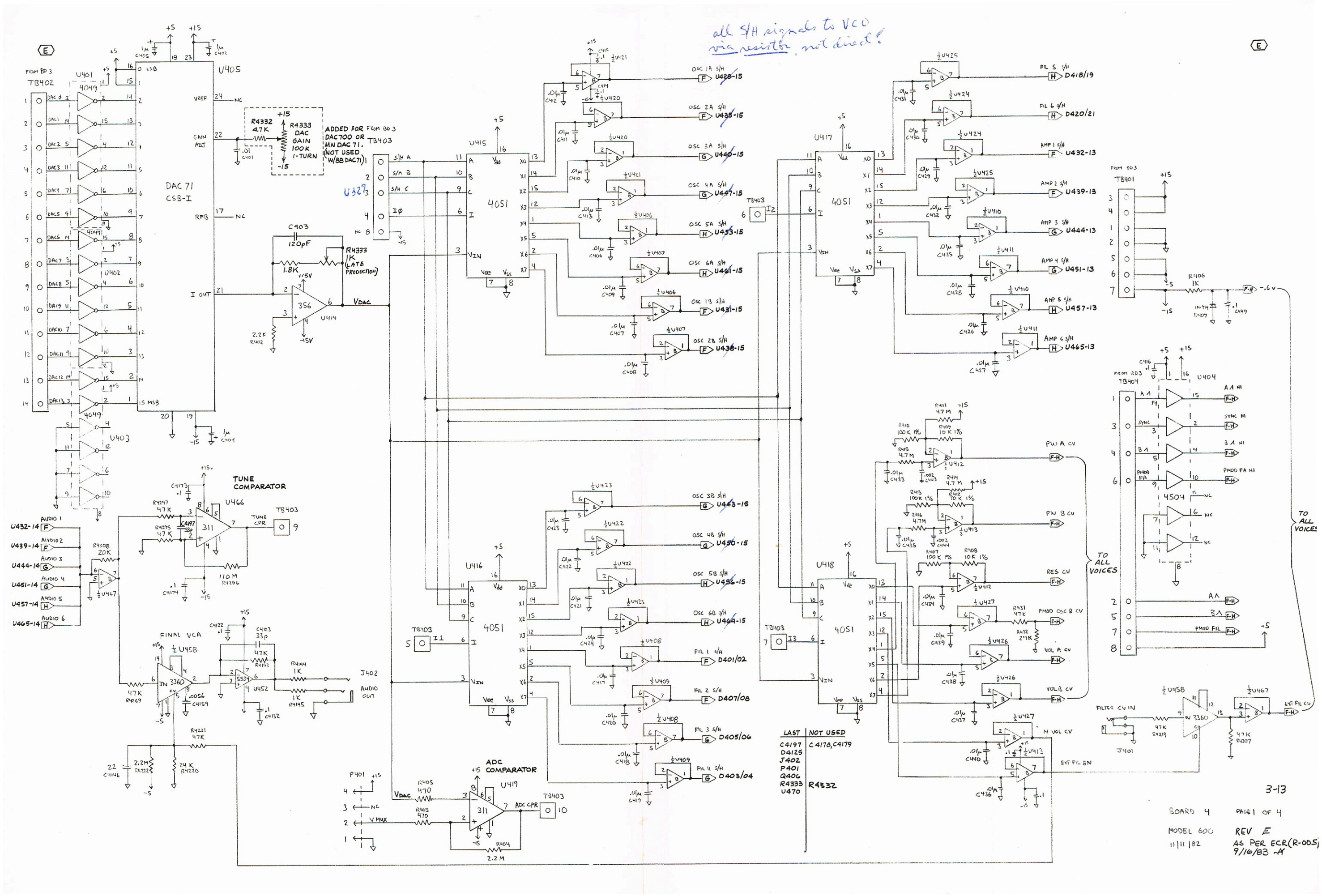
all S/H signals to VCO via resistor, not direct!
DAC 71 CSB-I
TUNE COMPARATOR
FINAL VCA
ADC COMPARATOR
ADDED FOR DAC700 OR MN DAC 71. (NOT USED W/BB DAC71)
R4333 DAC GAIN 100K 1-TURN
R4333 1K (LATE PRODUCTION)
TO ALL VOICES
LAST | NOT USED
C4197 | C4178, C4179
D4125
J402
P401
Q406
R4333 | R4332
U470
3-13
BOARD 4
PAGE 1 OF 4
MODEL 600
REV E
11/11/82
AS PER ECR(R-005)
9/16/83 -A

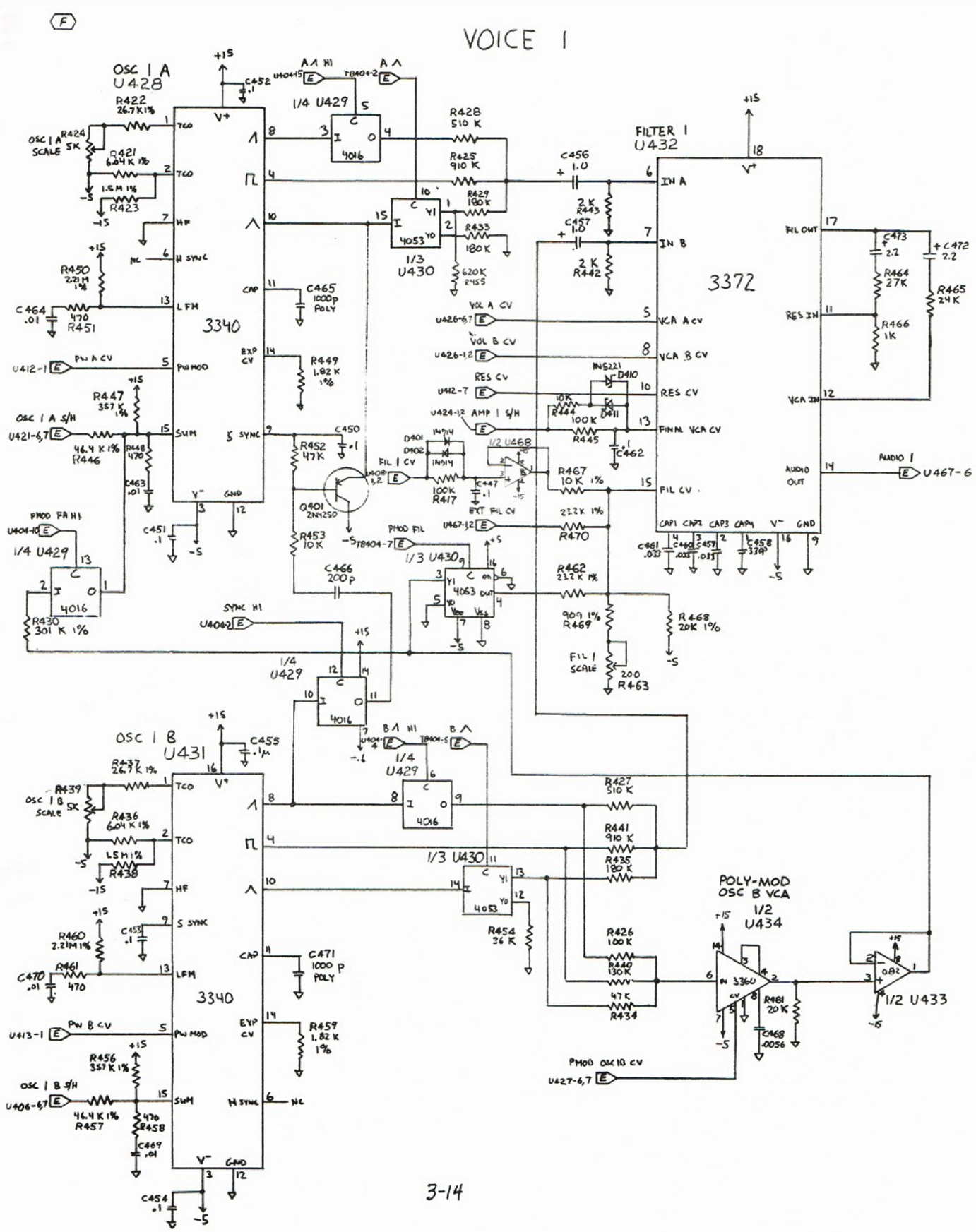

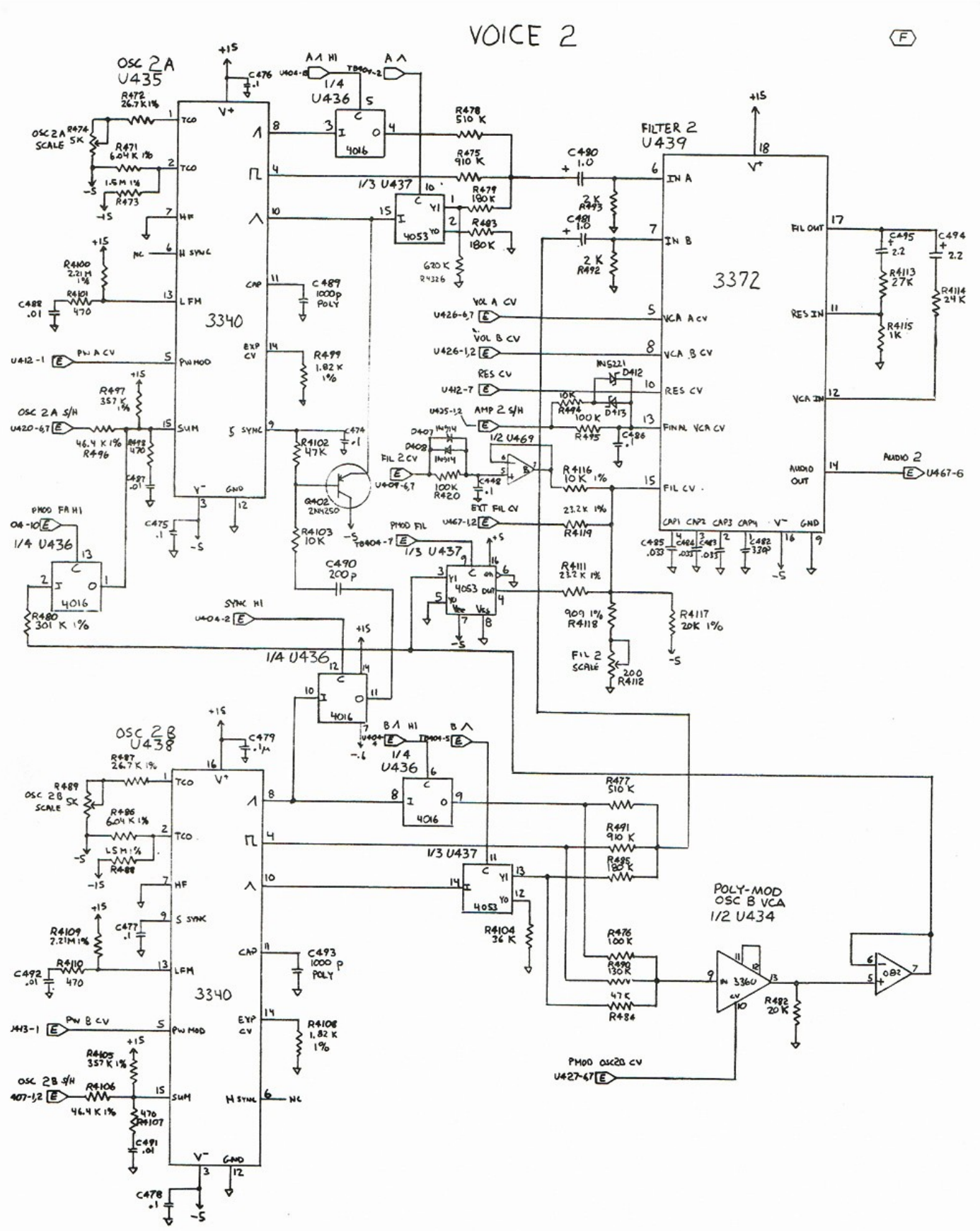

Modification To VCO Circuits

For correct scaling, all Sequential synthesizers with Rev G CEM3340 VCO chips need the 26.7K 1% resistors (part# R-146) in the VCO circuits to be replaced with 25.5K 1% resistors (part# R-516). This change may affect tuning of Prophet-5, -10, -600, and -T8s.

PRELIMINARY

REFER CHANGES TO ENGINEERING DEPT.

SEQUENTIAL CIRCUITS INC

APPROVALS	DATE	TITLE	VOICE CELLS 1&2
DWN Ron Chaffee	8-23-82	SIZE D	DWG. NO. 600
CHK		DOCUMENT NO.	REV
DSN		5D600-4	D
PDN			
ISS DMS	11-24-82	SCALE	SHEET 2 OF 4

BOARD 4
VOICES 1 AND 2
11/11/82

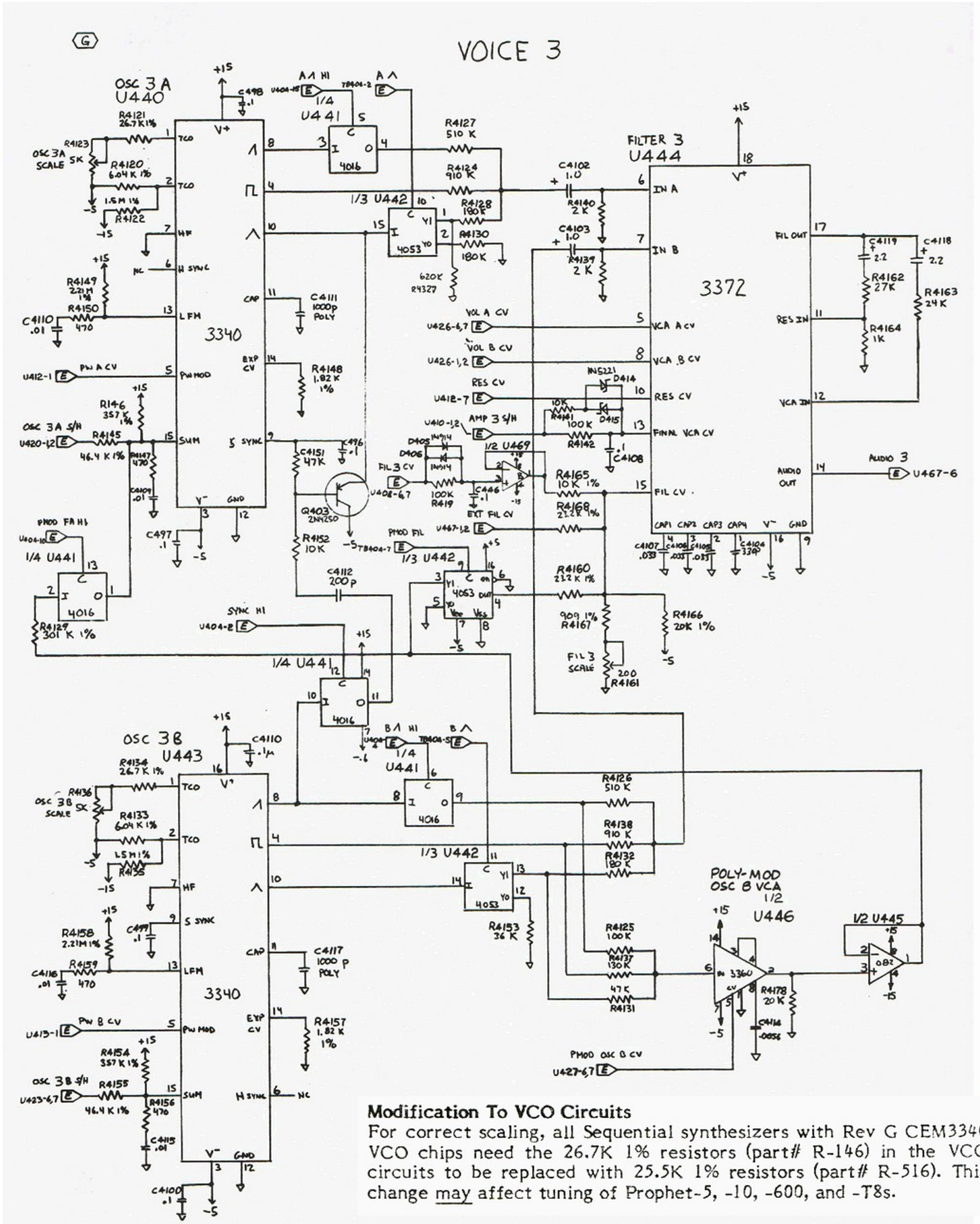

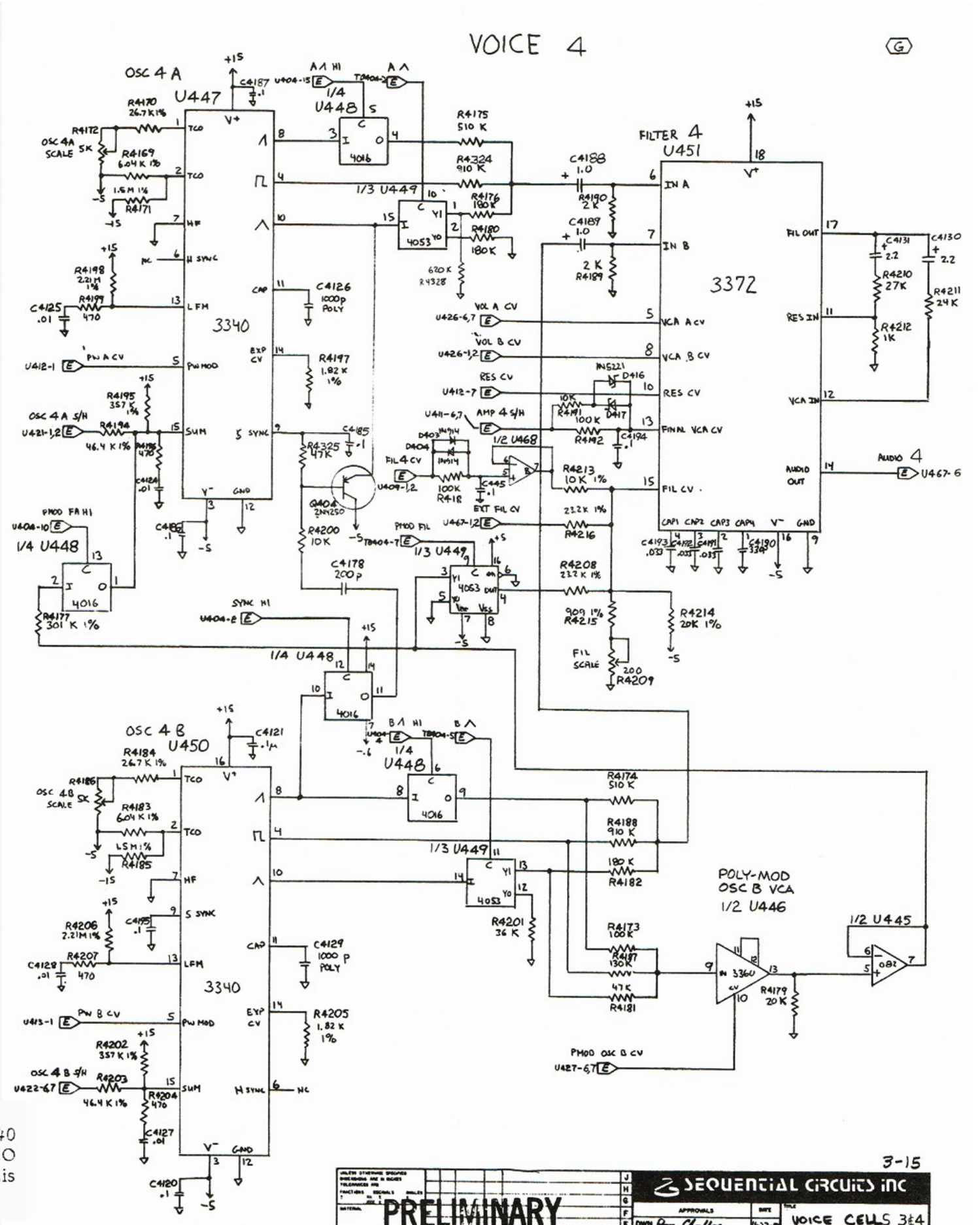

PRELIMINARY
REFER CHANGES TO ENGINEERING DEPT.
DO NOT SCALE DRAWING

SEQUENTIAL CIRCUITS INC

APPROVALS	
DWN Ron Chaffee	11-23-82
CHK	
DSN	
PEN	
ISS DMS	11-24-82
TITLE	VOICE CELLS 3&4
SIZE D	MODEL No. 600
DOCUMENT No.	SD600-4
REV	D
SCALE	SHEET 3 OF 4

3-15

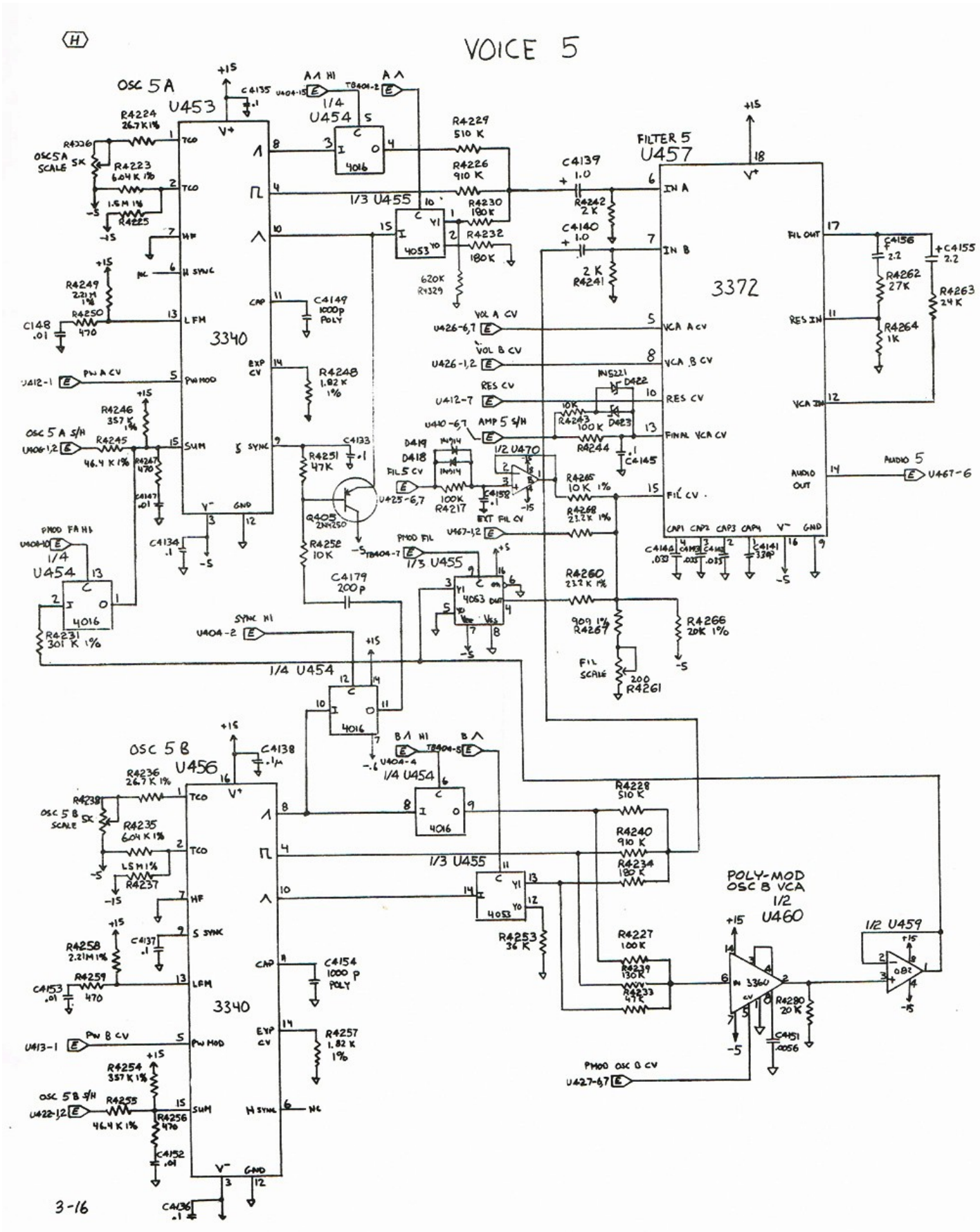

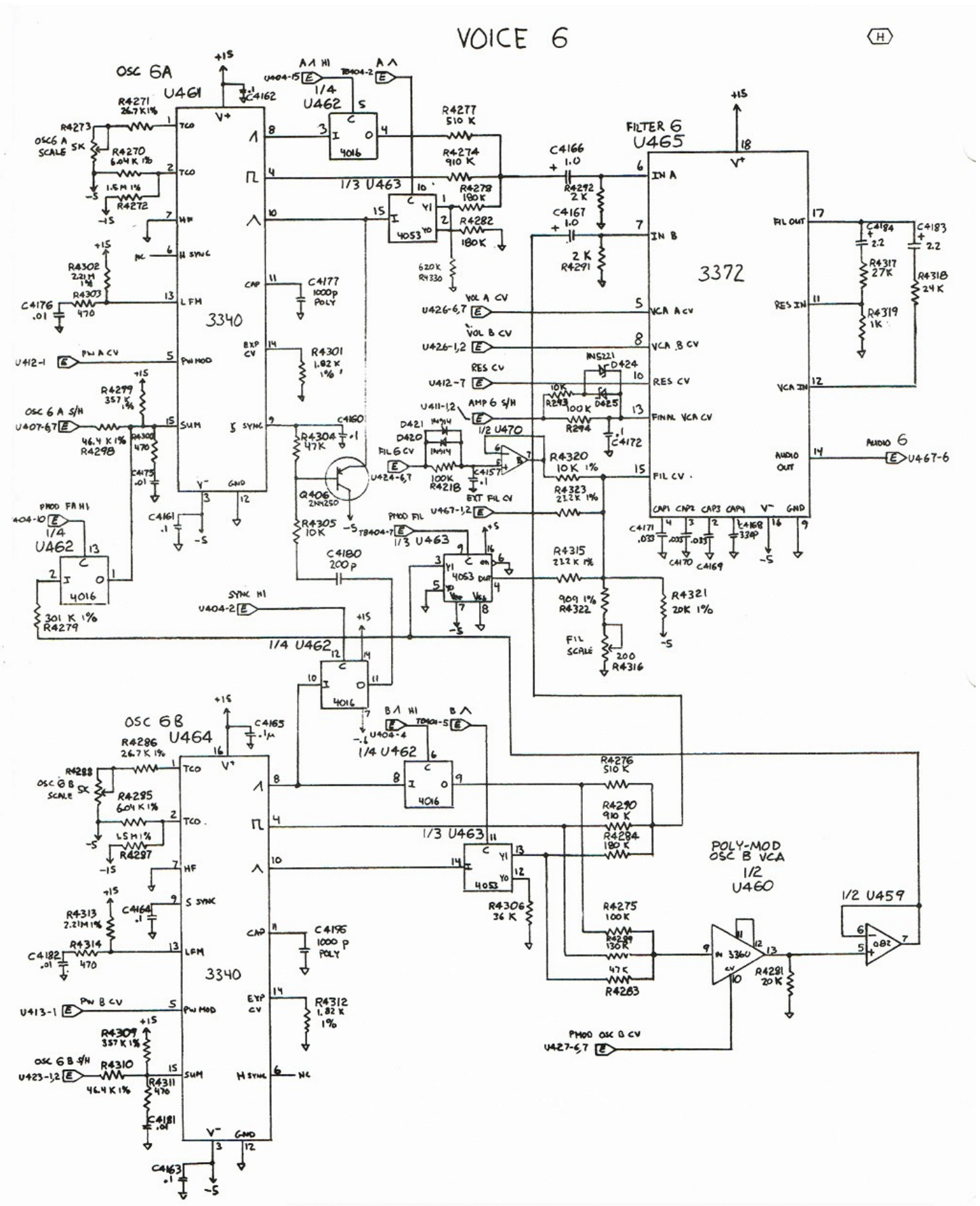

BOARD 4
VOICES 5 AND 6
11/11/82

Modification To VCO Circuits

For correct scaling, all Sequential synthesizers with Rev G CEM3340 VCO chips need the 26.7K 1% resistors (part# R-146) in the VCO circuits to be replaced with 25.5K 1% resistors (part# R-516). This change may affect tuning of Prophet-5, -10, -600, and -T8s.

PARTS

4-0 SYSTEM/CHASSIS

Designator	SCI #	Description
	854	Prophet-600 Factory Program/Sequence Cassette
	CM600	Operation Manual
	S-034	Footswitch
F1	E-019	1/2A Slo-blo fuse
J1, P2	E-086	line cord
J2	J-056	5-pin molex housing
J4/5	J-069	6-pin molex housing
J6/7	J-071	5-pin DIN jack
P3	P-073	ac power connector
R1/2	R-207	100K wheel pots
S1	S-054	power switch
S2	S-062	line voltage selector
SA1	S-061	membrane switch pad
SA2, J3	S-060	5-octave keyboard
T1	E-114	power transformer

Chassis Hardware	
E-128	fuseholder body
E-129	fuseholder cap
P-031	polarizing pin
P-049	molex pins
M-016	large rubber feet
M-357	knob
MW600-1A	top panel
MW600-3B	bottom panel
WD600-1A	wood side

Z-254	Wheel Box subassembly
P-049	molex pins
M-070	wheel set screws
M-073	pitch wheel detent clip
M-352	molded wheel
MW000-1A	wheel bracket
MW600-4A	wheel box

4-1 PCB 1 LEFT CONTROL PANEL (Z-249)

Designator	SCI #	Description
C101-104	C-045	.1 uF 50V disc
C105	C-020	1 uF 25V tantalum
D101-122	D-005	1N914
D123/124	D-008	1N34
DS101	L-005	MAN6740 dual 7-segment
DS102-110	L-001	large red LED
P101	J-068	11 pin AMP
P102	P-069	5-pin locking molex
P103	P-071	16 pin molex header
P104	P-070	15-pin header
Q101-104	T-002	2N3904
QA101	T-011	RCA 3082 transistor array
R101/102	R-028	470K 5%
R111-115	R-234	10K linear control
R116-123	R-040	22K 5%
R124-130	R-234	10K linear control
R131	R-008	1K 5%
S101-114	S-046	DPDT slide
U101-103	I-227	4042 quad latch
U104	I-218	4514 4 to 16 demultiplexer
U105/106	I-216	4503 hex tristate buffer
U107	I-228	4174 hex latch
U108	I-245	4067 16-channel mux/dmux
U109	I-428	780-5 +5V regulator
W101	E-111	12-wire ribbon

PCB 1 Hardware

J-074	9-pin housing (for DS101)
J-075	9-pin insert (for DS101)
M-402	3/16" LED spacer
PC600-1B	PCB 1

4-2 PCB 2 RIGHT CONTROL PANEL (Z-250)

Designator	SCI #	Description
C201	C-045	.1 uF 50V disc
D201/202	D-005	1N914
R201-206	R-234	10K linear control
R207	R-008	1K 5%
R208-218	R-234	10K linear control
S201	S-047	DPDT slide
U201	I-245	4067 16-channel mux/dmux

PCB 2 Hardware

PC600-2A	PCB 2

4-3 PCB 3 COMPUTER BOARD (Z-251)

C301-04	C-021	2.2 uF 25V tantalum
C305	C-075	3300 uF 16V electrolytic
C306/07	C-074	1000 uF 35V electrolytic
C308	C-045	.1 uF 50V mylar
C309	C-031	10 uF 10V tantalum
C310	C-007	600 pF 50V disc
C311	C-045	.1 uF 50V disc
C312	C-021	2.2 uF 25V tantalum
C313-16	C-045	.1 uF 50V disc
C317	C-046	.0056 uF 100V mylar
C318	C-045	.1 uF 50V disc
C319	C-014	.02 uF 50V mylar
C320-25	C-045	.1 uF 50V disc
D302/03	D-004	MR501 100V 3A
D304-07	D-001	1N4002
D308-14	D-005	1N914
D315	D-006	6V 1W zener
D316	D-005	1N914
BT301	E-040	2.9V lithium battery
J301-03	J-048	phono jack, pcb mount
P301/02	P-067	6-pin locking molex
R301/02	R-004	330 5%
R303	R-025	100K 5%
R304	R-004	330 5%
R305	R-076	27K 5%
R306	(not used)	
R307	R-025	100K 5%

Designator	SCI #	Description
R308	R-011	4.7K 5%
R309-11	R-010	2K 5%
R312	R-011	4.7K 5%
R313	R-402	150 5%
R314	R-010	2K 5%
R315	R-402	150 5%
R316	R-010	2K 5%
R317	R-040	22K 5%
R318	R-025	100K 5%
R319	R-144	20.0K 1%
R320	R-107	4.99K 1%
R321	R-011	4.7K 5%
R322	R-115	301K 1%
R323	R-107	4.99K 1%
R324	R-108	10K 1%
R325	R-115	301K 1%
R326	R-045	10M 5%
R327	R-011	4.7K 5%
R328/29	R-025	100K 5%
R330/31	R-010	2K 5%
R332	R-011	4.7K 5%
R333	R-403	270 5%
R334	R-010	2K 5%
R335	R-041	150K 5%
R336	R-012	10K 5%
U301	I-428	780-5 5V regulator
U302	I-429	780-15 15V regulator
U303	I-408	79M15 -15V regulator
U304	I-411	LM7905/79M05 -5V regulator
U305	I-103	74LS04 hex inverter
U306	I-009	7493 4-bit counter
U307	I-058	Z-80A CPU
U308	I-230	74C02 quad NOR
U309	I-117	74LS138 3 to 8 decoder
U310	Z-1004	2764 firmware SIX.0.2
U311	I-004	7408 quad AND
U312	I-107	74LS32 quad OR
U313	I-043	6116LP-4 RAM
U314	I-101	quad NAND
U315	I-241	74C32
U316	I-043	6116LP-4 RAM
U317	I-330	PC-900 optoisolator
U318	I-103	74LS04 hex inverter
U319	I-109	74LS74 dual fli =flop
U320	I-414	8253 timer
U321	I-301	311 comparator
U322	I-117	74LS138 3 to 8 decoder
U323	I-060	68B50 UART
U324	I-205	4013 dual flip flop
U325	I-216	4503 hex tristate buffer
U326-29	I-228	4174 hex latch
U330	I-205	4013 dual flip flop
U331	I-228	4174 hex latch

Designator	SCI #	Description
U332	I-403	78L05 5V regulator
Y301	E-112	8 MHz crystal

PCB 3 Hardware

J-016	40-pin DIP socket
J-017	24-pin DIP socket
J-045	28-pin DIP socket
PC600-3C	PCB 3
M-107	nylon shoulder washer (for regulators)
M-370	TO-220 greaseless insulator (for regulators)
MW600-2A	regulator heatsink

4-4 PCB 4 VOICE BOARD (Z-252)

C401	C-012	.01 uF 50V mylar
C402	C-020	1 uF 25V tantalum
C403	C-047	120 pF 1000V disc
C404/05	C-020	1 uF 25V tantalum
C406-13	C-012	.01 uF 50V mylar
C414-16	C-045	.1 uF 50V disc
C417-40	C-012	.01 uF 50V mylar
C441/42	C-045	.1 uF 50V disc
C443/44	C-009	.002 uF 50V mylar
C445-55	C-045	.1 uF 50V disc
C456/57	C-080	1.0 uF 50V elect, low-leakage
C458	C-066	330 pF 50V disc
C459-61	C-079	.033 uF 100V mylar
C462	C-045	.1 uF 50V disc
C463/64	C-012	.01 uF 50V mylar
C465	C-039	1000 pF 50V polystyrene
C466	C-005	220 pF 50V disc
C467	C-045	.1 uF 50V disc
C468	C-046	.0056 100V mylar
C469/70	C-012	.01 uF 50V mylar
C471	C-039	1000 pF 50V polystyrene
C472/73	C-081	2.2 uF 50V elect, low-leakage
C474-79	C-045	.1 uF 50V disc
C480/81	C-080	1.0 uF 50V elect, low-leakage
C482	C-066	330 pF 50V disc
C483-85	C-079	.033 uF 100V mylar
C486	C-045	.1 uF 50V disc
C487/88	C-012	.01 uF 50V mylar
C489	C-039	1000 pF 50V polystyrene
C490	C-005	220 pF 50V disc
C491/92	C-012	.01 uF 50V mylar
C493	C-039	1000 pF 50V polystyrene
C494/95	C-081	2.2 uF 50V elect, low-leakage
C496-101	C-045	.1 uF 50V disc
C4102/103	C-080	1.0 uF 50V elect, low-leakage
C4104	C-066	330 pF 50V disc

Designator	SCI #	Description
C4105-107	C-079	.033 uF 100V mylar
C4108	C-045	.1 uF 50V disc
C4109/110	C-012	.01 uF 50V mylar
C4111	C-039	1000 pF 50V polystyrene
C4112	C-005	220 pF 50V disc
C4113	C-045	.1 uF 50V disc
C4114	C-046	.0056 100V mylar
C4115/116	C-012	.01 uF 50V mylar
C4117	C-039	1000 pF 50V polystyrene
C4118/119	C-081	2.2 uF 50V elect, low-leakage
C4120-122	C-045	.1 uF 50V disc
C4123	C-003	33 pF 50V disc
C4124/125	C-012	.01 uF 50V mylar
C4126	C-039	1000 pF 50V polystyrene
C4127/128	C-012	.01 uF 50V mylar
C4129	C-039	1000 pF 50V polystyrene
C41230/131	C-081	2.2 uF 50V elect, low-leakage
C4132-38	C-045	.1 uF 50V disc
C4139/140	C-080	1.0 uF 50V elect, low-leakage
C4141	C-066	330 pF 50V disc
C4142/144	C-079	.033 uF 100V mylar
C4145	C-045	.1 uF 50V disc
C4146	C-081	2.2 uF 50V elect, low-leakage
C4147/148	C-012	.01 uF 50V mylar
C4149	C-039	1000 pF 50V polystyrene
C4150	C-045	.1 uF 50V disc
C4151	C-046	.0056 100V mylar
C4152/153	C-012	.01 uF 50V mylar
C4154	C-039	1000 pF 50V polystyrene
C4155/156	C-081	2.2 uF 50V elect, low-leakage
C4157/158	C-045	.1 uF 50V disc
C4159	C-046	.0056 100V mylar
C4160-165	C-045	.1 uF 50V disc
C4166/167	C-080	1.0 uF 50V elect, low-leakage
C4168	C-066	330 pF 50V disc
C4169-171	C-079	.033 uF 100V mylar
C4172-174	C-045	.1 uF 50V disc
C4175/176	C-012	.01 uF 50V mylar
C4177	C-039	1000 pF 50V polystyrene
C4178/179	(not used)	
C4180	C-005	220 pF 50V disc
C4181/182	C-012	.01 uF 50V mylar
C4183/184	C-081	2.2 uF 50V elect, low-leakage
C4185-187	C-045	.1 uF 50V disc
C4188/189	C-080	1.0 uF 50V elect, low-leakage
C4190	C-066	330 pF 50V disc
C4191/193	C-079	.033 uF 100V mylar
C4194/195	C-045	.1 uF 50V disc
C4196	C-039	1000 pF 50V polystyrene
C4197	C-003	33 pF 50V disc

Designator	SCI #	Description
D401-09	D-005	1N914
D410-17	D-009	1N5221 2.4V Zener
D418-21	D-005	1N914
D422-25	D-009	1N5221 2.4V Zener
J401	J-048	tip-sleeve switched phone jack
J402	J-049	tip-ring sleeve phone jack
P401	P-051	4-pin molex
Q401-06	T-003	2N4250
R401	R-103	2.32K 1%
R402	R-034	2.2K 5%
R403	R-006	470 5%
R404	R-030	2.2M 5%
R405	R-006	470 5%
R406	R-008	1K 5%
R407	R-110	100K 1%
R408/09	R-108	10K 1%
R410	R-110	100K 1%
R411	R-061	4.7M 5%
R412	R-108	10K 1%
R413	R-110	100K 1%
R414-16	R-061	4.7M 5%
R417-20	R-017	39K 5%
R421	R-191	6.04K 1%
R422	R-146	26.7K 1%
R423	R-192	1.5M 1%
R424	R-211	5K trimmer
R425	R-406	910K 5%
R426	R-025	100K 5%
R427/28	R-074	510K 5%
R429	R-094	180K 5%
R430	R-115	301K 1%
R431	R-018	47K 5%
R432	R-073	24K 5%
R433	R-094	180K 5%
R434	R-018	47K 5%
R435	R-094	180K 5%
R436	R-191	6.04K 1%
R437	R-146	26.7K 1%
R438	R-192	1.5M 1%
R439	R-211	5K trimmer
R440	R-077	130K 5%
R441	R-406	910K 5%
R442/43	R-010	2K 5%
R444	R-012	10K 5%
R445	R-025	100K 5%
R446	R-193	46.4K 5%
R447	R-170	357K 1%
R448	R-006	470 5%
R449	R-139	1.82K 1%

Designator	SCI #	Description
R450	R-116	2.21M 1%
R451	R-006	470 5%
R452	R-018	47K 5%
R453	R-012	10K 5%
R454	R-404	36K 5%
R455	R-081	?
R456	R-170	357K 1%
R457	R-193	46.4K 5%
R458	R-006	470 5%
R459	R-139	1.82K 1%
R460	R-116	2.21M 1%
R461	R-006	470 5%
R462	R-190	23.2K 1%
R463	R-219	200 trimmer
R464	R-076	27K 5%
R465	R-073	24K 5%
R466	R-008	1K 5%
R467	R-108	10K 1%
R468	R-144	20.0K 1%
R469	R-174	909 1%
R470	R-190	23.2K 1%
R471	R-191	6.04K 1%
R472	R-146	26.7K 1%
R473	R-192	1.5M 1%
R474	R-211	5K trimmer
R475	R-406	910K 5%
R476	R-025	100K 5%
R477/78	R-074	510K 5%
R479	R-094	180K 5%
R480	R-115	301K 1%
R481/82	R-015	20K 5%
R483	R-094	180K 5%
R484	R-018	47K 5%
R485	R-094	180K 5%
R486	R-191	6.04K 1%
R487	R-146	26.7K 1%
R488	R-192	1.5M 1%
R489	R-211	5K trimmer
R490	R-077	130K 5%
R491	R-406	910K 5%
R492/93	R-010	2K 5%
R494	R-012	10K 5%
R495	R-025	100K 5%
R496	R-193	46.4K 5%
R497	R-170	357K 1%
R498	R-006	470 5%
R499	R-139	1.82K 1%
R4100	R-116	2.21M 1%
R4101	R-006	470 5%
R4102	R-018	47K 5%
R4103	R-012	10K 5%
R4104	R-404	36K 5%
R4105	R-170	357K 1%

Designator	SCI #	Description
R4106	R-193	46.4K 5%
R4107	R-006	470 5%
R4108	R-139	1.82K 1%
R4109	R-116	2.21M 1%
R4110	R-006	470 5%
R4111	R-190	23.2K 1%
R4112	R-219	200 trimmer
R4113	R-076	27K 5%
R4114	R-073	24K 5%
R4115	R-008	1K 5%
R4116	R-108	10K 1%
R4117	R-144	20.0K 1%
R4118	R-174	909 1%
R4119	R-190	23.2K 1%
R4120	R-191	6.04K 1%
R4121	R-146	26.7K 1%
R4122	R-192	1.5M 1%
R4123	R-211	5K trimmer
R4124	R-406	910K 5%
R4125	R-025	100K 5%
R4126/127	R-074	510K 5%
R4128	R-094	180K 5%
R4129	R-115	301K 1%
R4130	R-094	180K 5%
R4131	R-018	47K 5%
R4132	R-094	180K 5%
R4133	R-191	6.04K 1%
R4134	R-146	26.7K 1%
R4135	R-192	1.5M 1%
R4136	R-211	5K trimmer
R4137	R-077	130K 5%
R4138	R-406	910K 5%
R4139/140	R-010	2K 5%
R4141	R-012	10K 5%
R4142	R-025	100K 5%
R4143/144	R-008	1K 5%
R4145	R-193	46.4K 5%
R4146	R-170	357K 1%
R4147	R-006	470 5%
R4148	R-139	1.82K 1%
R4149	R-116	2.21M 1%
R4150	R-006	470 5%
R4151	R-018	47K 5%
R4152	R-012	10K 5%
R4153	R-404	36K 5%
R4154	R-170	357K 1%
R4155	R-193	46.4K 5%
R4156	R-006	470 5%
R4157	R-139	1.82K 1%
R4158	R-116	2.21M 1%
R4159	R-006	470 5%
R4160	R-190	23.2K 1%
R4161	R-219	200 trimmer

Designator	SCI #	Description
R4162	R-076	27K 5%
R4163	R-073	24K 5%
R4164	R-008	1K 5%
R4165	R-108	10K 1%
R4166	R-144	20.0K 1%
R4167	R-174	909 1%
R4168	R-190	23.2K 1%
R4169	R-191	6.04K 1%
R4170	R-146	26.7K 1%
R4171	R-192	1.5M 1%
R4172	R-211	5K trimmer
R4173	R-025	100K 5%
R4174/175	R-074	510K 5%
R4176	R-094	180K 5%
R4177	R-115	301K 1%
R4178/179	R-015	20K 5%
R4180	R-094	180K 5%
R4181	R-018	47K 5%
R4182	R-094	180K 5%
R4183	R-191	6.04K 1%
R4184	R-146	26.7K 1%
R4185	R-192	1.5M 1%
R4186	R-211	5K trimmer
R4187	R-077	130K 5%
R4188	R-406	910K 5%
R4189/190	R-010	2K 5%
R4191	R-012	10K 5%
R4192	R-025	100K 5%
R4193	R-018	47K 5%
R4194	R-193	46.4K 5%
R4195	R-170	357K 1%
R4196	R-006	470 5%
R4197	R-139	1.82K 1%
R4198	R-116	2.21M 1%
R4199	R-006	470 5%
R4200	R-012	10K 5%
R4201	R-404	36K 5%
R4202	R-170	357K 1%
R4203	R-193	46.4K 5%
R4204	R-006	470 5%
R4205	R-139	1.82K 1%
R4206	R-116	2.21M 1%
R4207	R-006	470 5%
R4208	R-190	23.2K 1%
R4209	R-219	200 trimmer
R4210	R-076	27K 5%
R4211	R-073	24K 5%
R4212	R-008	1K 5%
R4213	R-108	10K 1%
R4214	R-144	20.0K 1%
R4215	R-174	909 1%
R4216	R-190	23.2K 1%
R4217/218	R-017	39K 5%

Designator	SCI #	Description
R4219	R-018	47K 5%
R4220	R-073	24K 5%
R4221	R-018	47K 5%
R4222	R-030	2.2M 5%
R4223	R-191	6.04K 1%
R4224	R-146	26.7K 1%
R4225	R-192	1.5M 1%
R4226	R-211	5K trimmer
R4227	R-025	100K 5%
R4228/229	R-074	510K 5%
R4230	R-094	180K 5%
R4231	R-115	301K 1%
R4232	R-094	180K 5%
R4233	R-018	47K 5%
R4234	R-094	180K 5%
R4235	R-191	6.04K 1%
R4236	R-146	26.7K 1%
R4237	R-192	1.5M 1%
R4238	R-211	5K trimmer
R4239	R-077	130K 5%
R4240	R-406	910K 5%
R4241/242	R-010	2K 5%
R4243	R-012	10K 5%
R4244-245	R-025	100K 5%
R4246	R-170	357K 1%
R4247	R-006	470 5%
R4248	R-139	1.82K 1%
R4249	R-116	2.21M 1%
R4250	R-006	470 5%
R4251	R-018	47K 5%
R4252	R-012	10K 5%
R4253	R-404	36K 5%
R4254	R-170	357K 1%
R4255	R-193	46.4K 5%
R4256	R-006	470 5%
R4257	R-139	1.82K 1%
R4258	R-116	2.21M 1%
R4259	R-006	470 5%
R4260	R-190	23.2K 1%
R4261	R-219	200 trimmer
R4262	R-076	27K 5%
R4263	R-073	24K 5%
R4264	R-008	1K 5%
R4265	R-108	10K 1%
R4266	R-144	20.0K 1%
R4267	R-174	909 1%
R4268	R-190	23.2K 1%
R4269	R-018	47K 5%
R4270	R-191	6.04K 1%
R4271	R-146	26.7K 1%
R4272	R-192	1.5M 1%
R4273	R-211	5K trimmer
R4274	R-406	910K 5%

Designator	SCI #	Description
R4275	R-025	100K 5%
R4276/277	R-074	510K 5%
R4278	R-094	180K 5%
R4279	R-115	301K 1%
R4280/281	R-015	20K 5%
R4282	R-094	180K 5%
R4283	R-018	47K 5%
R4284	R-094	180K 5%
R4285	R-191	6.04K 1%
R4286	R-146	26.7K 1%
R4287	R-192	1.5M 1%
R4288	R-211	5K trimmer
R4289	R-077	130K 5%
R4290	R-406	910K 5%
R4291/292	R-010	2K 5%
R4293	R-012	10K 5%
R4294	R-025	100K 5%
R4295	R-018	47K 5%
R4296	R-045	10M 5%
R4297	R-018	47K 5%
R4298	R-193	46.4K 5%
R4299	R-170	357K 1%
R4300	R-006	470 5%
R4301	R-139	1.82K 1%
R4302	R-116	2.21M 1%
R4303	R-006	470 5%
R4304	R-108	10K 1%
R4305	R-012	10K 5%
R4306	R-404	36K 5%
R4307	R-018	47K 5%
R4308	R-015	20K 5%
R4309	R-170	357K 1%
R4310	R-193	46.4K 5%
R4311	R-006	470 5%
R4312	R-139	1.82K 1%
R4313	R-116	2.21M 1%
R4314	R-006	470 5%
R4315	R-190	23.2K 1%
R4316	R-219	200 trimmer
R4317	R-076	27K 5%
R4318	R-073	24K 5%
R4319	R-008	1K 5%
R4320	R-108	10K 1%
R4321	R-144	20.0K 1%
R4322	R-174	909 1%
R4323	R-190	23.2K 1%
R4324	R-406	910K 5%
R4325	R-018	47K 5%
R4326-330	R-081	?
R4331	R-406	910K 5%
R4332	R-011	4.7K 5%
R4333	R-214	100K trimmer

Designator	SCI #	Description
U401-03	I-209	4049 hex inverter
U404	I-237	4504 hex level shifter
U405, original production		
	I-502	Burr-Brown DAC71-CSB-I
U405, current production		
	I-506	Burr-Brown DAC700-CSB-I, or
	I-502	Micro Networks DAC71-CSB-I
U406-13	I-312	TL082 dual BIFET op amp
U414	I-323	LF356 op amp
U415-18	I-211	4051 8-channel mux/dmux
U419	I-301	311 comparator
U420-27	I-312	TL082 dual BIFET op amp
U428	I-321	CEM3340 VCO
U429	I-206	4016 quad analog switch
U430	I-243	4053 analog switch
U431	I-321	CEM3340 VCO
U432	I-331	CEM3372
U433	I-312	TL082 dual BIFET op amp
U434	I-327	CEM3360 VCA
U435	I-321	CEM3340 VCO
U436	I-206	4016 quad analog switch
U437	I-243	4053 analog switch
U438	I-321	CEM3340 VCO
U439	I-331	CEM3372
U440	I-321	CEM3340 VCO
U441	I-206	4016 quad analog switch
U442	I-243	4053 analog switch
U443	I-321	CEM3340 VCO
U444	I-331	CEM3372
U445	I-312	TL082 dual BIFET op amp
U446	I-327	CEM3360 VCA
U447	I-321	CEM3340 VCO
U448	I-206	4016 quad analog switch
U449	I-243	4053 analog switch
U450	I-321	CEM3340 VCO
U451	I-331	CEM3372
U452	I-317	NE5534 audio op amp
U453	I-321	CEM3340 VCO
U454	I-206	4016 quad analog switch
U455	I-243	4053 analog switch
U456	I-321	CEM3340 VCO
U457	I-331	CEM3372
U458	I-331	CEM3372
U459	I-312	TL082 dual BIFET op amp
U460	I-327	CEM3360 VCA
U461	I-321	CEM3340 VCO
U462	I-206	4016 quad analog switch
U463	I-243	4053 analog switch
U464	I-321	CEM3340 VCO
U465	I-331	CEM3372
U466	I-301	311 comparator
U467-70	I-312	TL082 dual BIFET op amp

Designator	SCI #	Description
	PCB 4 Hardware	
	E-115	7-wire jumper
	E-116	10-wire jumper
	E-117	14-wire jumper
	E-121	8-wire jumper
	J-007	16-pin DIP socket
	J-017	24-pin DIP socket
	J-027	14-pin DIP socket
	J-041	18-pin DIP socket
	PC600-4C	PCB 4

Modification To VCO Circuits

For correct scaling, all Sequential synthesizers with Rev G CEM3340 VCO chips need the 26.7K 1% resistors (part# R-146) in the VCO circuits to be replaced with 25.5K 1% resistors (part# R-516). This change may affect tuning of Prophet-5, -10, -600, and -T8s.

PROPHET-600 (add this sheet at the back of TL600)

POWER DETECT RETROFIT (ECR R-012)

There is a well-known principle to the effect that if something works, don't mess with it. We challenged this by changing the power detect circuit in the -600, and have been appropriately punished: the circuit causes dropped programs and other glitches. Therefore the power detector circuit in all -600s must be modified to the same configuration used in the Prophet-5, which, fortunately, still works. We are allowing 1/2 hour warranty time for this modification.

Modification instructions:

PCB 3

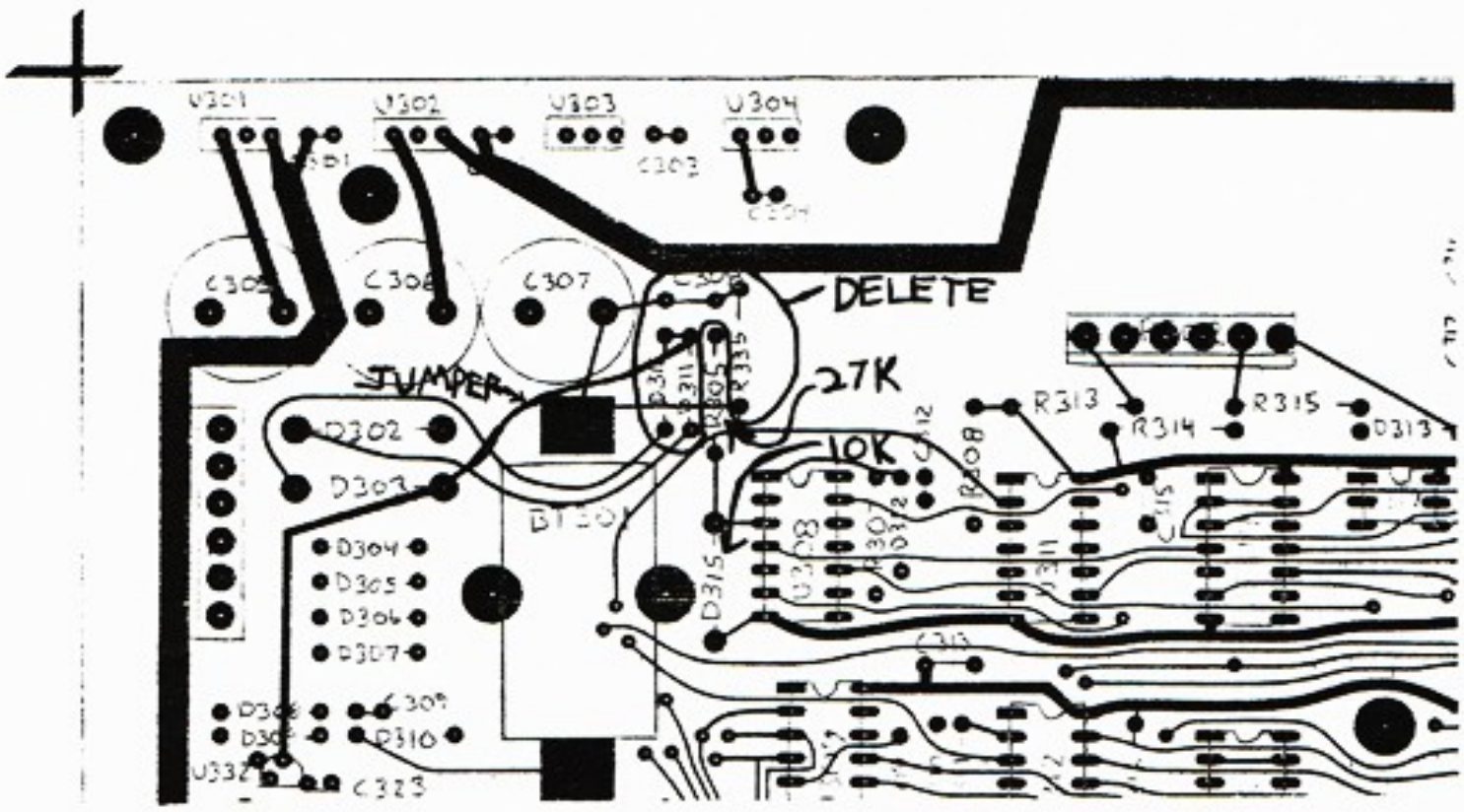

Remove four parts:

Desig.	SCI #	
C308	C-045, .1	
D311	D-005, 1N914	not found on Rev. B board
D316	D-005, 1N914	not found on Rev. B board
R335	R-041, 150K	not found on Rev. B board

Change R305 from R-073 (24K) to R-076 (27K)

Change D315 D-006 (6V Zener) to R-012 (10K)

Add jumper from the cathode of D303 to the top of R305 (R-076).

PROPHET-600 (add this sheet at the back of TL600)

POWER DETECT RETROFIT (ECR R-012)

OLD SCHEMATIC

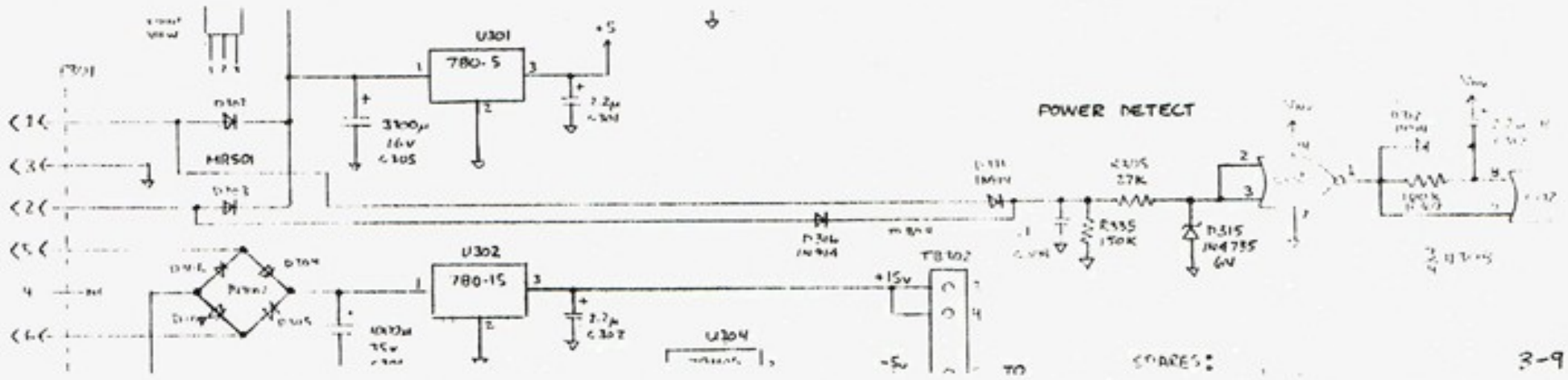

NEW SCHEMATIC

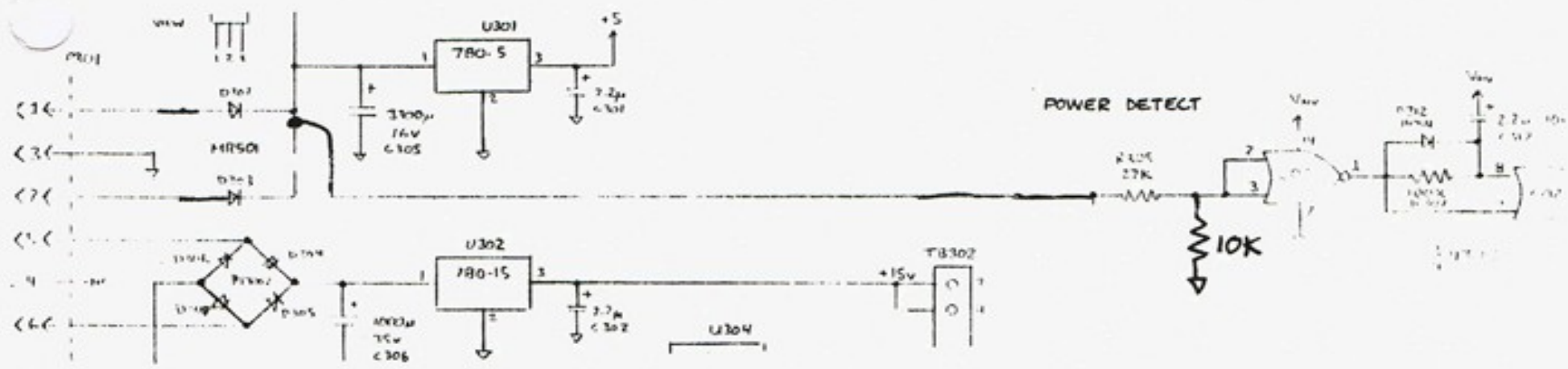

PROPHET-600 (add this sheet at the back of TL600)

TECHNICAL MANUAL

TL600A is enclosed. The following changes were made after printing.

VOICE DEFEAT

A voice defeat has been added, which is operated by holding the affected key, then pressing RECORD and 7. Add enclosed page CN600-0, explaining this, to your Operation Manual, CM600A. The voice defeat is included in software level SIX_0_2_1 and above.

PITCH WHEEL CENTERING

Here is a reminder that the PITCH wheel center value is stored in non-volatile memory. Therefore the PITCH wheel must be reinitialized if there has been a non-volatile problem, reset problem (such as is caused by the unmodified power on/reset circuit), or the 6116LP RAMs have been replaced. It will also have to be reinitialized, for example, if someone offsets the wheel on a display model just "for fun."

To calibrate the PITCH wheel:

1. Center the PITCH wheel in the detent.
3. Press and hold RECORD, then press PROGRAM SELECT #3.

(Note: With current software, it is not necessary to record two sequences before the PITCH wheel can be calibrated.

DIAGNOSTICS

A diagnostic EPROM is now available for the Prophet-600, which all Service Centers are required to have and use. Order SCI #Z-1026. Instructions for the diagnostics are included with the EPROM.

PROPHET-600 (add this sheet at the back of TL600)

NEW SOFTWARE (ECR R-014)

Software level SIX.0.3 (Z-1024) fixes a delay in sequencer starting which occurs under certain circumstances. It also initializes the voice pointer so that following TUNE, the first note played is assigned to voice 1. This helps isolate a problem to a specific voice.

no longer current
SIX.Ø.4 fixes tuning problem

WHEEL DIODES

Following the initial production release, germanium diodes are connected between the PITCH and MOD wheel wipers and +5Va supply to protect the 4067. Add these diodes to early units if they are not present.

UART SUBSTITUTE (ECR R-010)

PCB 3 Computer Board in the Tech Manual is Rev C. Rev D has just been released to production. In this version a 68A50 UART (SCI #I-066) is used in place of of the 68B50. To use this part, the 40-nsec delay line is slightly modified by inserting a 2K resistor (SCI #R-010) between the second and third LS04 gates, U305-4 and -9. A 33 pF capacitor (SCI #C-003) is also added from U305-9 to ground.

It is a good idea to draw this change in on your schematic:

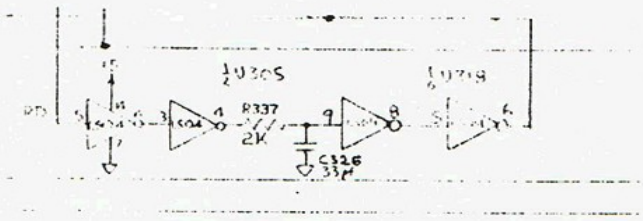

VOLTAGE SELECT SCHEMATIC ERROR

The power supply voltage selector switch pins should be relabelled as follows:

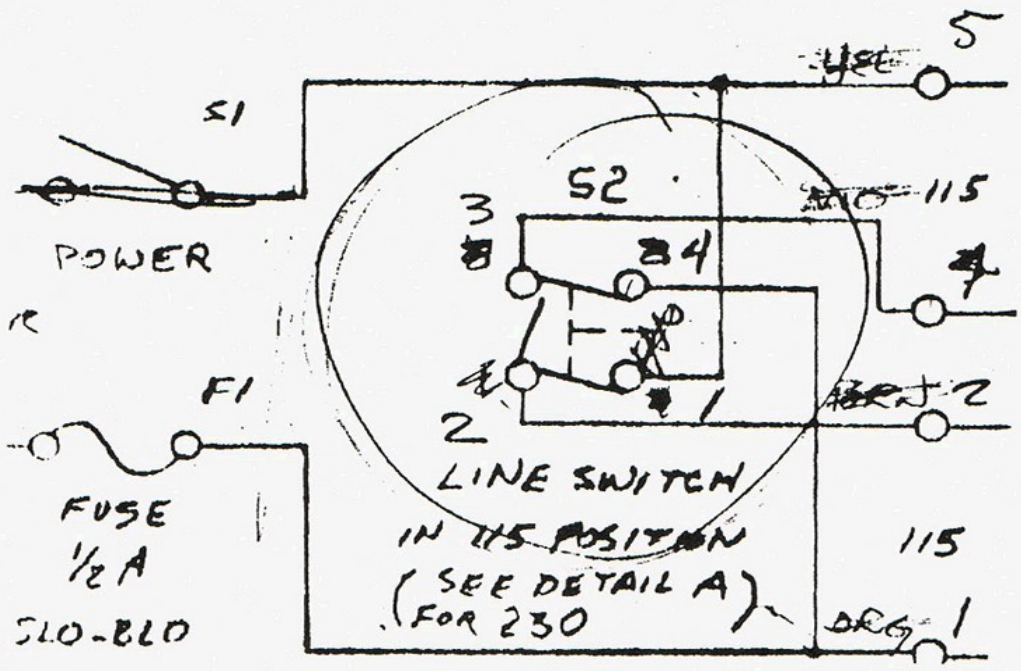

PROPHET-600 (add this sheet at the back of TL600)

DAC GAIN MOD (ECR R-005)

Originally a 100K DAC GAIN trimmer was connected to pin 22 as follows:

OLD CIRCUIT

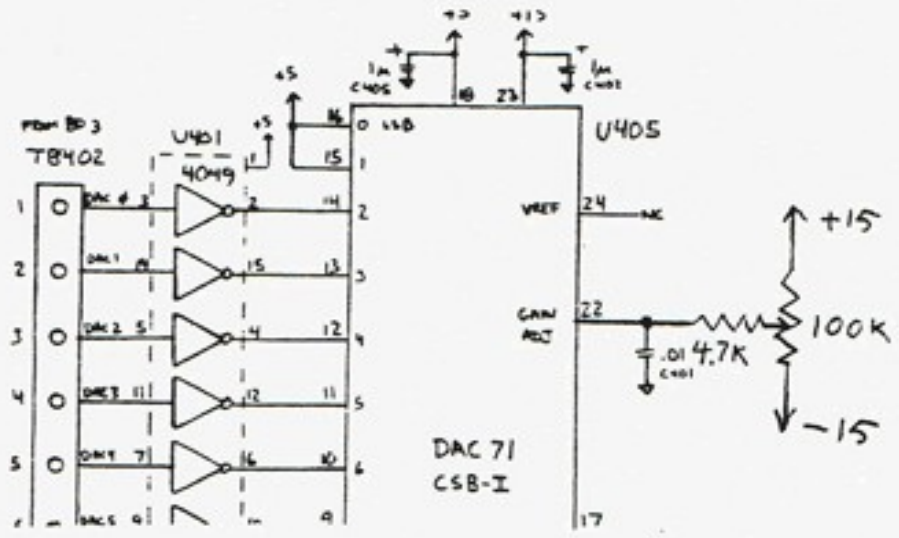

In Rev D, for increased range, pin 22 is ignored and the gain adjustment moved to the DAC buffer instead:

NEW CIRCUIT

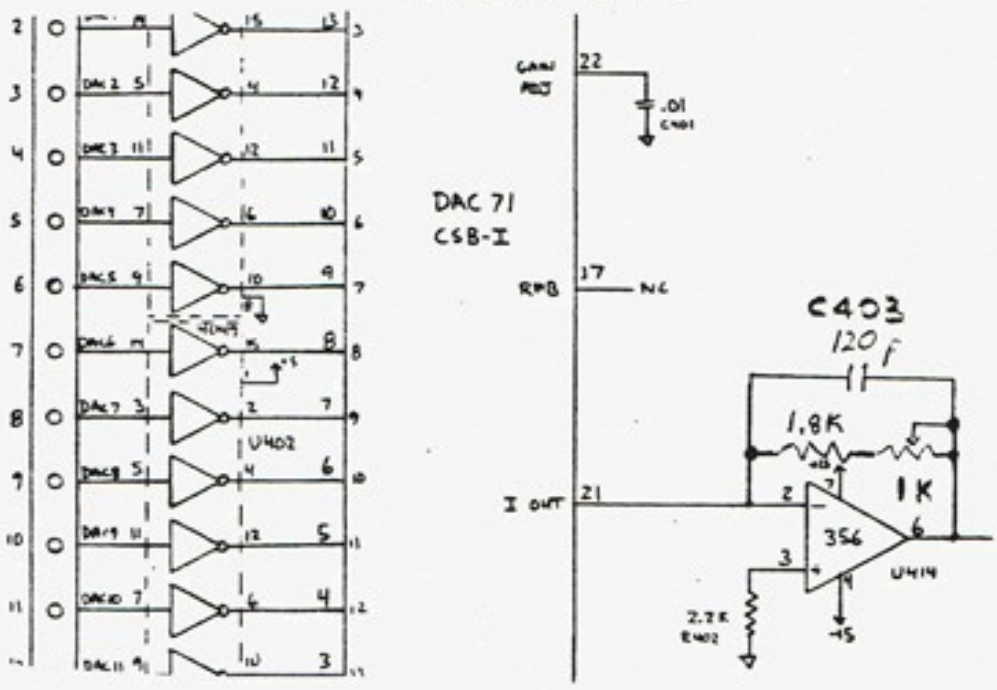

The 1K trimmer is SCI #R-237, the 1.8K is R-075. On Rev C, the change was made by cutting some traces and adding three jumper wires. This change need not be retrofitted.

Bad Resistors
Sometimes an oscillator will play accurately over a few octaves, then go way out of tune as you play up the keyboard. In several instances this has been caused by the 357K 1% pull-up resistor, connected to pin 15 of the oscillators, being open. The only way to check the resistor is to lift one end and measure its value. (It will appear OK when looking at it with a scope--even with the oscillator chip removed.)

600/49 Spare parts kit released. Order SPK600-01.

600/78 Model 865 released. This is a customer-paid option, software version SIX_0_5, which adds MIDI Mode and Channel select. Service Center cost is $35. Customer cost is $50 + installation.

Omni Mode	RECORD/6
Poly Mode	RECORD/8
Channel Display	RECORD/9
Channel Increment	RECORD/9/TUNE

Incorporates changes to All Notes Off implementation.

600/81 The original power detect circuit was published on page 3-9 of the Tech Manual TM600A. This circuit proved to drop programs and was therefore changed as shown on pages 4 and 5 of Field Bulletin #10.

In production the 74C02 has now become unavailable. Therefore we have changed to a 74HC02 for U308. But guess what. The rest of the power detect circuit now has to be modified to work with the HC02.

For clarity, all versions are shown on the next page. If you find a late-production unit which drops programs, check that if U308 is a 74HC02, this latest modification has been performed. The mod is similar to the original circuit, except that instead of clamping the input to the gate with a Zener, the diode clamps to +5Vd. Also, the level at R305 is much higher, thus dips never reach below the switching threshold.

600/98 The resonance specification of the CEM3372 has been changed (by the manufacturer), requiring a decrease in the resistor which couples the chip output back in to pin 11. Instead of 27K, the value must be 24K. The resistors affected are (on PCB 4):

R464	R4210
R4113	R4262
R4162	R4317

Old and new filters cannot be mixed on any board. (Check the date code.)

When ordering replacement filters, you will have to specify whether it is for a board with 24K or 27K resonance resistors.

600/99 Motorola 74LS04 date code 8419 may fail in the clock circuit and must be replaced. The failure mode is that the clock starts at 16 MHz.

600/100 Model 865, SIX_0_6 is released to fix problem with envelope adjustments while playing.

600/81 U308 Power Detect Summary

ORIGINAL (don't use)

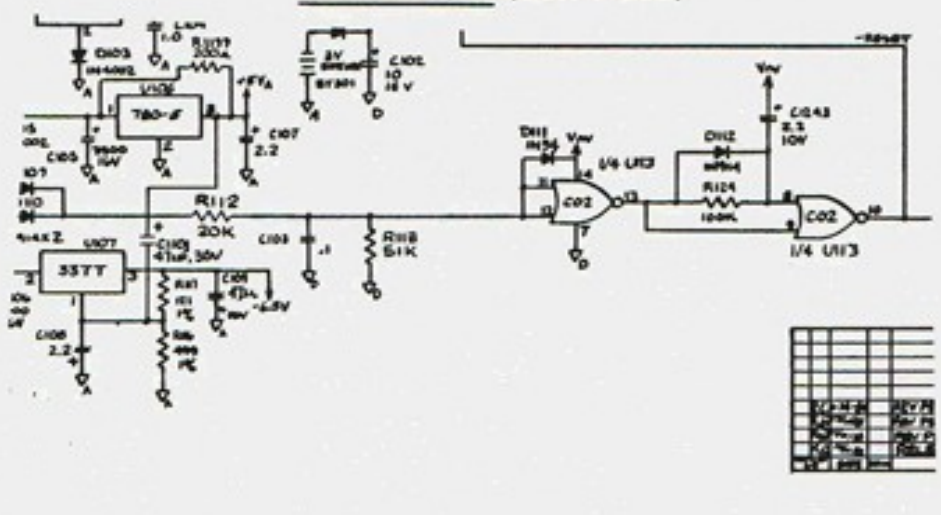

FIRST MOD (use for 74C02)

SECOND MOD (use for 74HC02)

this resistor must be 24K for reliable operation at 50Hz.

CURIOUS 600 BUGS DEPT 19 JUN 84

#4368 had voice 6 dead, both A & B oscs. Scope showed both osc's functioning, but at an ultrasonic frequency. Failure of the filter section was suspected, as this would cause the tuning routine to grossly mistune both oscs. C4184 2.2μfd 50v in the filter section was found to be intermittent and replaced, curing the problem. It seems likely that other failures in the filter section would cause a similar symptom by interfering with the tune process.

Mem. loss - (intermittent): replace 74C02

Another curious tune failure —— #4781 had osc 4A apparently dead, but actually oscillating supersonically. OSC4A - CV was all the way up. S/H tested OK with diag. ROM Suspected failure of 1 analog sw so osc could be forced into the audible range via a finger on the S/H op amp, but only ⊓ and ⌒ switches gave output. Scoping the analog switch showed it was OK. Turned out that the resistor downstream of the 1 analog switch (R4175) was open (ohmmeter check; can't scope the downstream side of resistor as this is a summing node).

PHO
22 JAN 86

Odd 600 bugs dept —

One oscillator dead. Scope showed VCO oscillating, but ultrasonically. S/H tested OK with diag ROM, and in fact osc. could be coaxed into audible range by providing some leakage (a finger) at S/H op amp input. Suggested tuning failure. Output OK thru 1 switch, but no 1 output in speaker when osc. was dragged down to audible freqs; ⊓ and ∧ outputs OK. 510K resistor out of 1 switch turned out to be open. Not possible to scope this failure since downstream end of resistor is a summing junction.

PHO
22JAN86