Sequential Circuits, Inc.
3051 North First Street
San Jose, CA 95134-2093
(408) 946-5240
TELEX: 364412 INTR 706

Nijverheidsweg 11c
3641 RP Mijdrecht
Netherlands
02979-6211
TELEX: 12721 SQNTL NL

Andrew
Mc. Gowas

PROPHET-T8
PRELIMINARY SERVICE DATA
Manual No. TN1008-0
Issued: August, 1983

Copyright©1983 by
SEQUENTIAL CIRCUITS, INC.
All rights reserved. Printed in USA.

PRELIMINARY INFORMATION
All subject to change.

GENERAL

For the following discussion, please refer to the accompanying block diagram and schematics.

The computer contains a Z-80B 8-bit Main processor and a 16-bit Z8002A Final processor, both running at 6 MHz.

The Z-80 Main handles the keyboard and control panel inputs, MIDI, and program and sequence data to constantly update Common RAM with current data in the formats required by the Final. For example some of the knobs act as plus/minus controls. In this case the Main would take the 00-FFH number from the ADC and convert it to a plus/minus two's complement sixteen-bit number with the correct weighting. The Z-80 also latches out switch bits to control the analog switches in the synth.

The Z-8002 Final processor calculates the digital envelopes, LFOs, and generates six final CVs for each of the eight voices (48 total) plus a few miscellaneous CVs. It refers to the Common RAM for data which it processes and sends to a First-In-First-Out (FIFO) buffer from which they are eventually clocked out as control voltages (CVs) to the Sample/Holds.

MAIN SYSTEM

The Main processor system consists of the Z-80 CPU, 2764 8K EPROM, five 6116LP Non-volatile static RAMS and the MIDI UART. The memory decoder enables only one of these devices at a time to use the Data bus. NV RAM can not be enabled if power is off.

The various input drivers and output latches are selected by chip selects (CSO-out, CSI-in) from the I/O decoder. The CSs clock:

a decoder for the LED and switch matrices,
a latch for the LED matrix,
a driver for the switch matrix,
a decoder and driver for the keyboard optics,
a miscellaneous latch for tape output and A-440,
a miscellaneous driver for tape and footswitch input,
a latch for programmed volume which drives two level DACs in the audio output stage,
four latches with synth switch signals,
two latches which address and select the multiplexer chips which channel the control knobs and pressure sensors to the Analog-to-Digital Converter (ADC), the ADC and ADC driver (input).

A 1-kHz interrupt clock is provided to both processors. In the Main, M1 is ORed with -IORQ to get INT ACK which resets INT FF. The INT FF has to be reset when first entering the interrupt state so the processor doesn't keep seeing INTs.

The Z-80 interrupt handling is much more complicated (in software) than the Z-8002, because the Main is doing keyboard scanning, knob conversion, switch scanning, LED output, MIDI processing. Keyboard scanning is most critical. It must be done on a 1 millisecond (= 1 kHz) basis to give sufficient resolution for velocity. The Main processor scans the entire keyboard every interrupt cycle. To prevent flickering, the LEDs are also strobed each cycle. Other tasks are accomplished on successive interrupt cycles. The knobs are read in background mode (in the time between the end of the interrupt handler and the appearance of the next INT).

Writing to the low-power RAMS (except Scratchpad) is enabled by a bit from the miscellaneous latch. The signal encounters an RC delay then enables writing (-WR) through an OR-gate. This hardware protects the memories against power-down problems.

FINAL SYSTEM

The Final processor system consists of the Z-8002, two 2732 EPROMS (4K words), the 8253-5 Timer/Counter for Tune and A-440, and the 64-word deep FIFO which is decoded as a single memory location. The Tune control latch is also memory-mapped. The Final Address bus is latched off of the Final Address/Data Bus by a latch driven by AS.

The Z-8002 clears its interrupt with a signal from the status decoder. It only processes every third INT (3 ms). (This gives the envelopes 3 ms. resolution.) Each time it undertakes the same routine for CV calculation. In its spare time (background mode) it processes key on/off information which has been received from the Main.

At the beginning of each interrupt cycle, the Final does a high-speed block move of 59 words to the FIFO. Output Ready (OR) goes high. The processor continues with other tasks while the hardware synchronizes FIFO output to the 14-bit DAC and CV Demultiplexer. The most significant bit of the first word in the FIFO is set, which becomes the S/H CLR signal. This resets the dual 4-bit counter which generates the S/H demultiplexer addresses. Clocked at 62.5 kHz, the counter increments and writes Vdac to each S/H until the FIFO is empty as indicated by OR low.

COMMON RAM AND ARBITRATION

The Main and Final Data busses interface Common RAM through transceivers which are governed ultimately by the Arbitration logic. The Main or Final Address busses define Common RAM locations through an Address bus multiplexer (selector) which is controlled by Z-80 and Z-8002 requests.

Optimized toward the Final processor, Common RAM is sixteen bits wide. The Z-80 can only access one byte at a time of course, so its Common RAM logic is a little more extensive than the Z-8002's because upper or lower bytes have to be selected.

For the Arbitration logic, both processors have REQUEST signals which are decoded memory addresses, ENABLE signals which turn on their Common RAM transceivers, and WAIT signals which tell them to pause. The Final has priority. Actually, neither processor enters a wait state unless there is contention for Common RAM. If both processors request RAM simultaneously, the Main must wait.

SCALING PROCEDURE

Scaling is required periodically, and after any power supply repairs.

1. Allow the unit to warm-up for at least 1/2 hour.

2. Center MASTER TUNE.

3. Center the PITCH wheel.

4. Lower the MOD wheel fully off.

5. Hold RECORD and press PROGRAM/SEQUENCE SELECT #3. This calibrates the wheels.

6. Open the top. Do not unmount any PC boards.

7. Hold A-440 and press TUNE. This activates the computer scaling routine. The routine proceeds by scaling OSC 1A, 1B, and FILT 1, OSC 2A, 2B ...through FILTER 8.

8. Observe the SAVE TO TAPE LED, which may either be lit or unlit. Trim OSC 1A scale trimmer to the point where the LED toggles on and off. There is some hysteresis in the trim--just get it as close as you can.

9. To advance to the next adjustment, press TUNE. In this case this brings up OSC 1B.

10. Advance to the FILT 1 and remaining trims by again pressing TUNE. If you lose track of what trim is appropriate, you can identify active oscillators by probing their pin 8 with a scope, which should show a sawtooth wave. Tuning filters can be identified by a sine wave on their pin 17.

11. After FILTER 8 has been trimmed, the Prophet-T8 will return to normal mode, with the A-440 signal providing audible indication of the end of the procedure.

12. It may be necessary to press TUNE several times to get the instrument into proper tune.

2-XX TUNE

Another feature of analog/digital technology is represented by the T-8 in the tune system. The accuracy of instrument performance is dependant upon the tune system's reliability to keep all sixteen oscillators and eight filters corrected constantly.

Tune occurs in two parts. At power-up, the system accurately measures both oscillator and filter frequencies (In a consecutive order from voice 1 to voice 8) through a nine octave range,and correlates the precise CVs necessary to create perfectly tuned octaves. The system uses a technique called sucessive approximation. In sucessive approximation, the recorded count of the analog pulse is compared to a reference count represented first by the DAC MSB. The computer sets the MSB as long as the pitch does not exceed the reference. This procedure is repeated, setting all fourteen DAC bits in order of the MSB to the LSB. The difference between the actual(14-bit,651uV) and hypothetical (83mV-step) CVs is called tuning "biases". The second part of tuning is active while playing, because the individual bias for the oscillators and filters are recalculated for each keystroke by the computer, and is then corrected for the note that is designated.

Like the Prophet 600, there is no tune multiplexer. Initially, U348-15 TUNE SELECT(TUNE SEL) controls U506 4053 analog switch,which selectively routes AUDIO LEFT(AUDIO L) for voices 1-4 and AUDIO RIGHT(AUDIO R) for voices 5-8 to the TUNE COMPARATOR(TUNE CPR). The computer then selects in order the oscillators and filters which drive U505 TUNE CPR(refer sheet J). TUNE CPR converts OSC and FILT references into pulses. R515 is placed in the feedback loop to prevent oscillations. U345-15 ENABLE TUNE (EN TUNE) acts as a pull-up reference at U505-7 output. The output is sent back to PCB-3 for counting in the tune circuit(refer sheet D).

The squared-up OSC/FILT pulses are attenuated through R316 and into U347-12 AND GATE. The computer generates a pulse from U345-2 to U347-13. This pulse serves as a "fake clock" which initializes the one-shot counter of U349 8253-5 Programmable Interval Timer. The PIT includes three independent 16-bit presettable down counters. CNTR 0 is programmed to count one oscillator pulse, but needs the fake clock to begin the count.

U345-5 latches the gate (G) signal to U349-11, which enables the cycle counter. Then it outputs the fake clock pulse to gate U347-11 high to begin the single count. When the cycle counter recieves the first falling edge, the output (pin 10) goes low. Pin 10 is also connected to MULTI MICRO IN (MI) of U348-7 microprocessor. This monitors the state of the one-shot so thatthe computer knows when to read the total time counter (CNTR 1). The output of CNTR 0 is then inverted, gating on CNTR 1, which will count at a 3MHZ rate. Because CNTR 0 is programmed for a single count, at the next falling edge pin 10 goes high, stopping CNTR 1. CNTR 1 is used to count the amount of 3 MHZ cycles during the analog represented pulse, which is then read through the DATA BUS. The difference between this number of cycles and the given reference causes the CPU to conform S/H CV and sample the given control.

In tuning an oscillator from octave C3 to C4, the reference count is halved because one cycle at C4 approximates half the 3MHZ clock cycles at C3. The reference count

remains the same at octaves C5 - C9, as CNTR 0 doubles its cycle count (2,4,.... ....32). Because of the amount of time it would take to count pulses for C0 - C2 at the low octaves, this information is extrapolated from the curve described by C3 - C9 located in the bias table.

A-440 is activated from U319-5 ENABLE 440 (EN 440) to CNTR 2, U349-16. CNTR 2 divides 3MHZ by 6818 to produce the 440-Hz square wave. EN 440 connects from P301-8 to P602-8 as control for 3/4 U607. When EN 440 is low, output 11 is disabled blocking any signal from CNTR 1. At this time output 9 is also disabled, allowing control pin 5 to be pulled high by R630, enabling this section which grounds out any leakage from pin 11. When EN 440 goes high, pin 6 goes high causing both pin 9 and control pin 5 to be grounded, which causes pin 3 to "float". At the same time control pin 12 is high, allowing the 440 Hz signal to pass at pin 11. A-440 is then inputted at AUDIO L and R at U609-6,9 (refer sheet M).

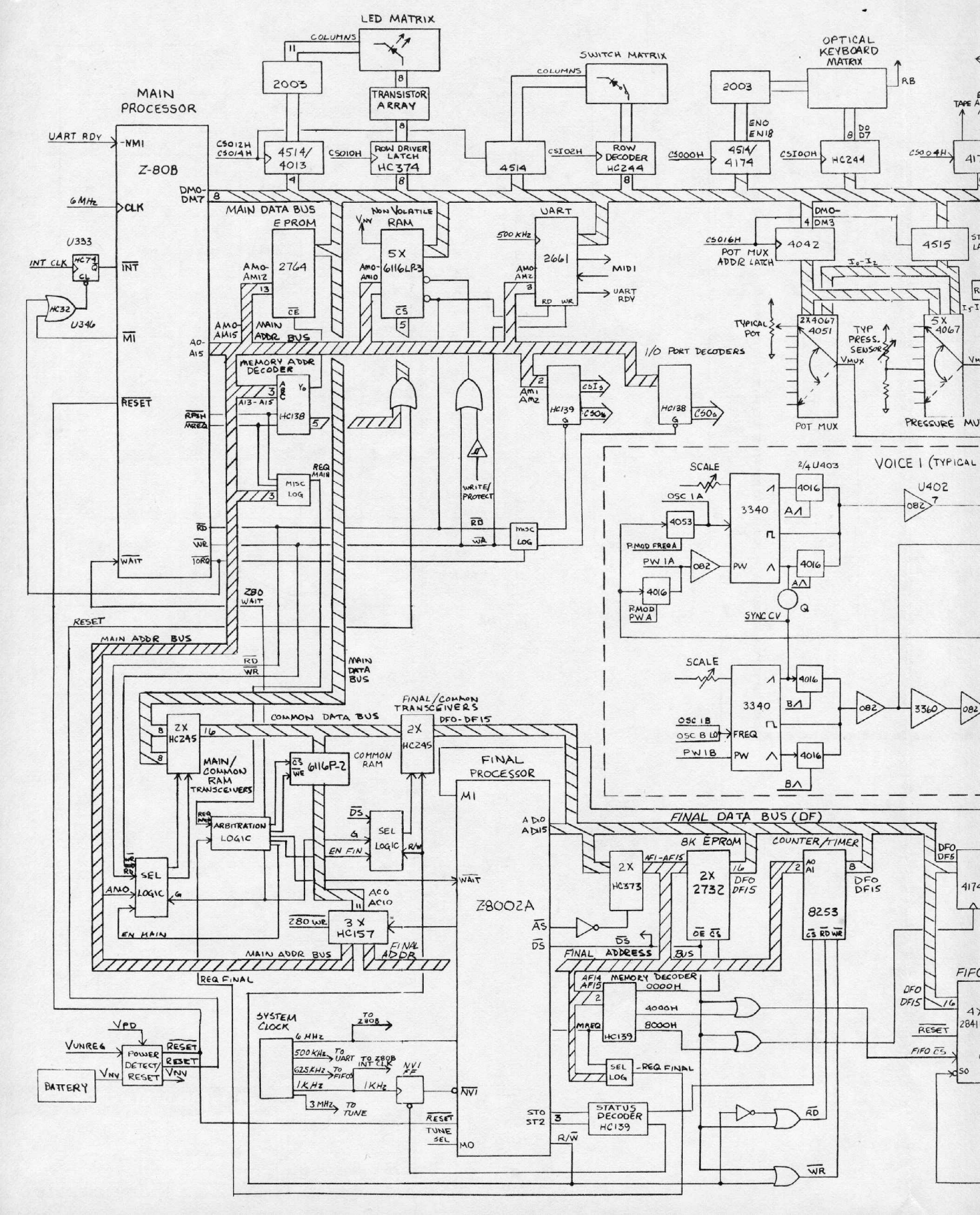

LED MATRIX
COLUMNS
2003
TRANSISTOR ARRAY
SWITCH MATRIX
COLUMNS
OPTICAL KEYBOARD MATRIX
RB
MAIN PROCESSOR
UART RDY
NMI
Z-80B
6MHz
CLK
U333
INT CLK
HC74
INT
HC32
U346
MI
RESET
CS012H
CS014H
4514/4013
CS010H
ROW DRIVER LATCH HC374
4514
CSI02H
ROW DECODER HC244
CS000H
4514/4174
CSI00H
HC244
CS004H
DMO-DM7
MAIN DATA BUS
EPROM
2764
NON VOLATILE RAM
5X 6116LP-3
UART
500 KHz
2661
MIDI
UART RDY
DMO-DM3
CS016H
POT MUX ADDR LATCH
4042
4515
TYPICAL POT
2X4067 4051
TYP PRESS. SENSOR
5X 4067
POT MUX
PRESSURE MU
MAIN ADDR BUS
MEMORY ADDR DECODER
HC138
I/O PORT DECODERS
HC139
HC138
WRITE/PROTECT
MISC LOG
REQ MAIN
RD
WR
WAIT
IORQ
Z80 WAIT
RESET
MAIN ADDR BUS
MAIN DATA BUS
VOICE 1 (TYPICAL
SCALE
2/4 U403
U402
OSC 1A
3340
4016
4053
P.MOD FREQ A
PW 1A
082
4016
P.MOD PW A
SYNC CV
SCALE
3340
OSC 1B
OSC B LO
FREQ
PW 1B
082
3360
082
FINAL/COMMON TRANSCEIVERS
COMMON DATA BUS
2X HC245
DFO-DF15
2X HC245
MAIN/COMMON RAM TRANSCEIVERS
6116P-2
COMMON RAM
FINAL PROCESSOR
MI
ARBITRATION LOGIC
SEL LOGIC
EN FIN
SEL LOGIC
AMO
EN MAIN
ACO AC10
Z80 WR
3X HC157
MAIN ADDR BUS
FINAL ADDR
Z8002A
FINAL DATA BUS (DF)
8K EPROM
COUNTER/TIMER
2X HC373
AF1-AF15
2X 2732
DFO DF15
8253
DFO DF5
FINAL ADDRESS BUS
REQ FINAL
MEMORY DECODER
0000H
4000H
8000H
HC139
SEL LOG
REQ FINAL
SYSTEM CLOCK
6 MHz
TO Z80B
500 KHz
TO UART
625 KHz
TO FIFOS
1 KHz
TO Z80B INT CLK
1 KHz
NVI FF
3 MHz
TO TUNE
VPD
VUNREG
POWER DETECT/RESET
RESET
VNV
BATTERY
STATUS DECODER HC139
TUNE SEL
MO
STO ST2
R/W
RD
WR
FIFO
DFO DF15
RESET
FIFO CS

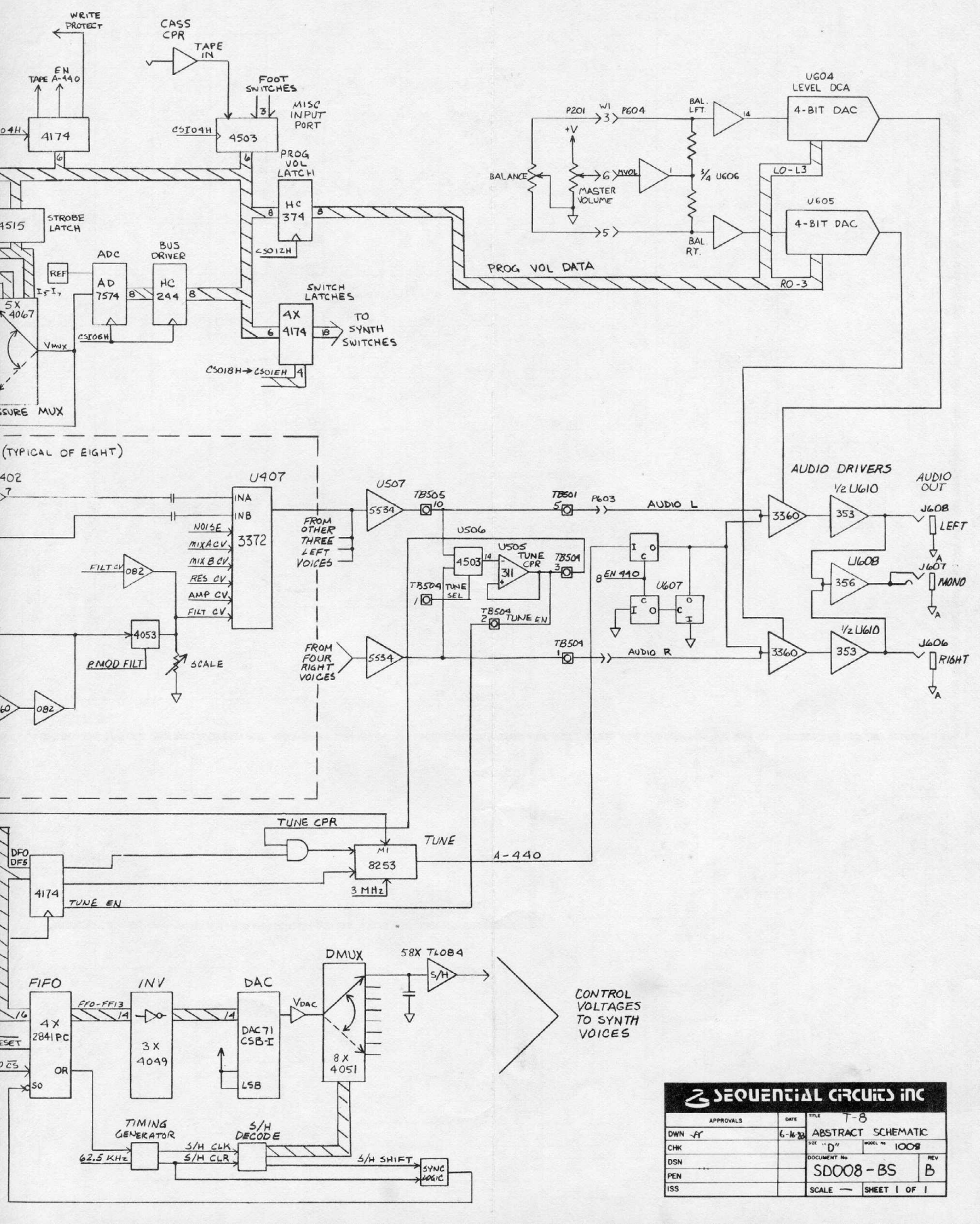

SEQUENTIAL CIRCUITS INC

APPROVALS	DATE
DWN AF	6-16-82
CHK	
DSN	
PEN	
ISS	

TITLE: T-8 ABSTRACT SCHEMATIC
SIZE "D" MODEL No. 1008
DOCUMENT No. SD008-BS REV B
SCALE — SHEET 1 OF 1

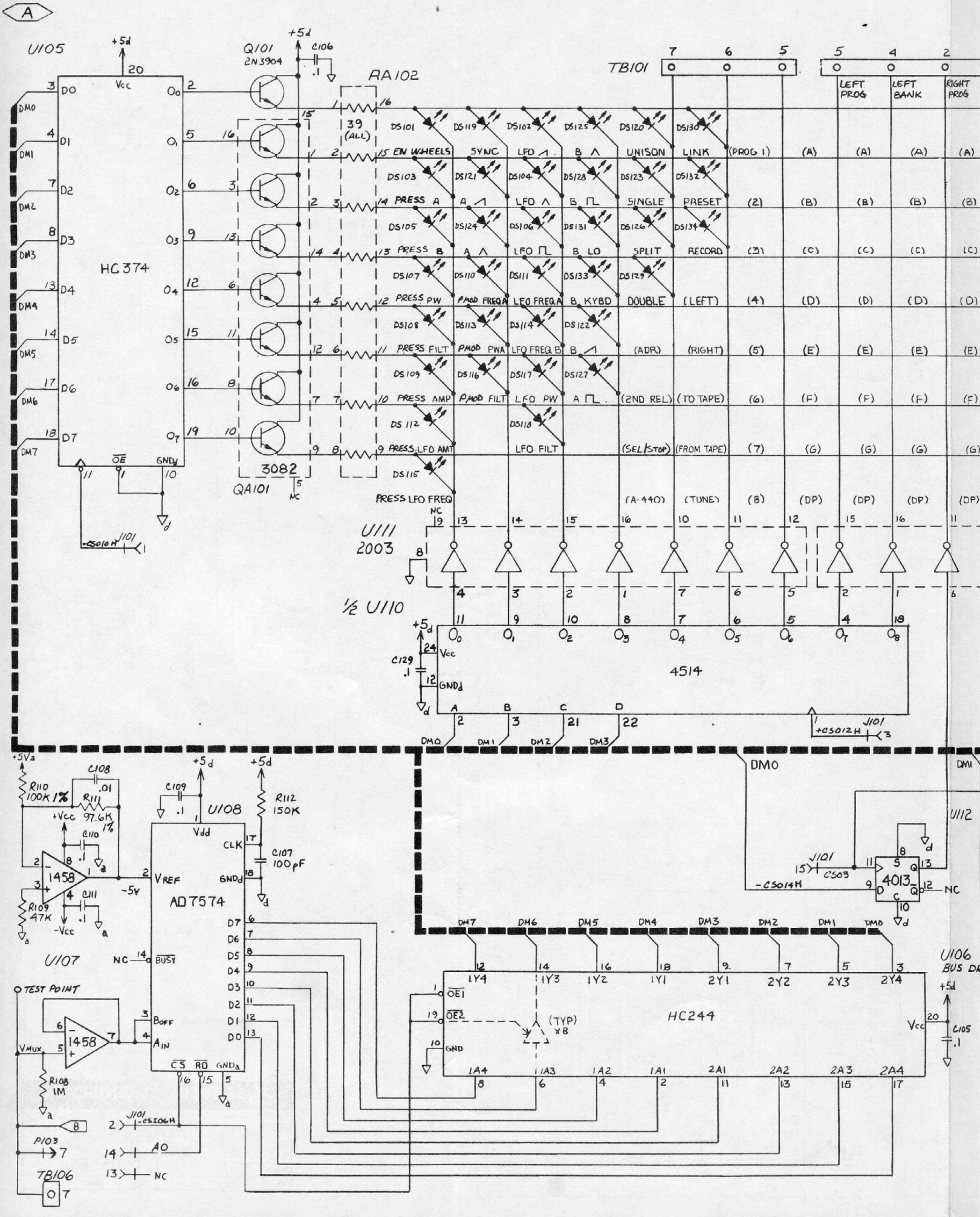
A
U105
HC374
Q101
2N3904
QA101
3082
RA102
39 (ALL)
TB101
LEFT PROG
LEFT BANK
RIGHT PROG
EN WHEELS
SYNC
LFO
B
UNISON
LINK
(PROG 1)
PRESS A
SINGLE
PRESET
PRESS B
SPLIT
RECORD
PRESS PW
PMOD FREQ A
LFO FREQ A
B KYBD
DOUBLE
(LEFT)
PRESS FILT
PMOD PWA
LFO FREQ B
(ADR)
(RIGHT)
PRESS AMP
PMOD FILT
LFO PW
(2ND REL)
(TO TAPE)
PRESS LFO AMT
LFO FILT
(SEL/STOP)
(FROM TAPE)
PRESS LFO FREQ
(A-440)
(TUNE)
U111
2003
½ U110
4514
C129
.1
J101
+CS012H
DM0
DM1
DM2
DM3
DM4
DM5
DM6
DM7
+5Va
R110
100K 1%
R111
97.6K 1%
C108
.01
C110
C111
1458
R109
47K
-5V
U108
AD7574
C109
R112
150K
C107
100pF
U107
TEST POINT
R108
1M
P103
TB106
J101
-CSI06H
AO
NC
U112
4013
CS03
-CS014H
U106
BUS DR
HC244
(TYP) x8
C105
.1

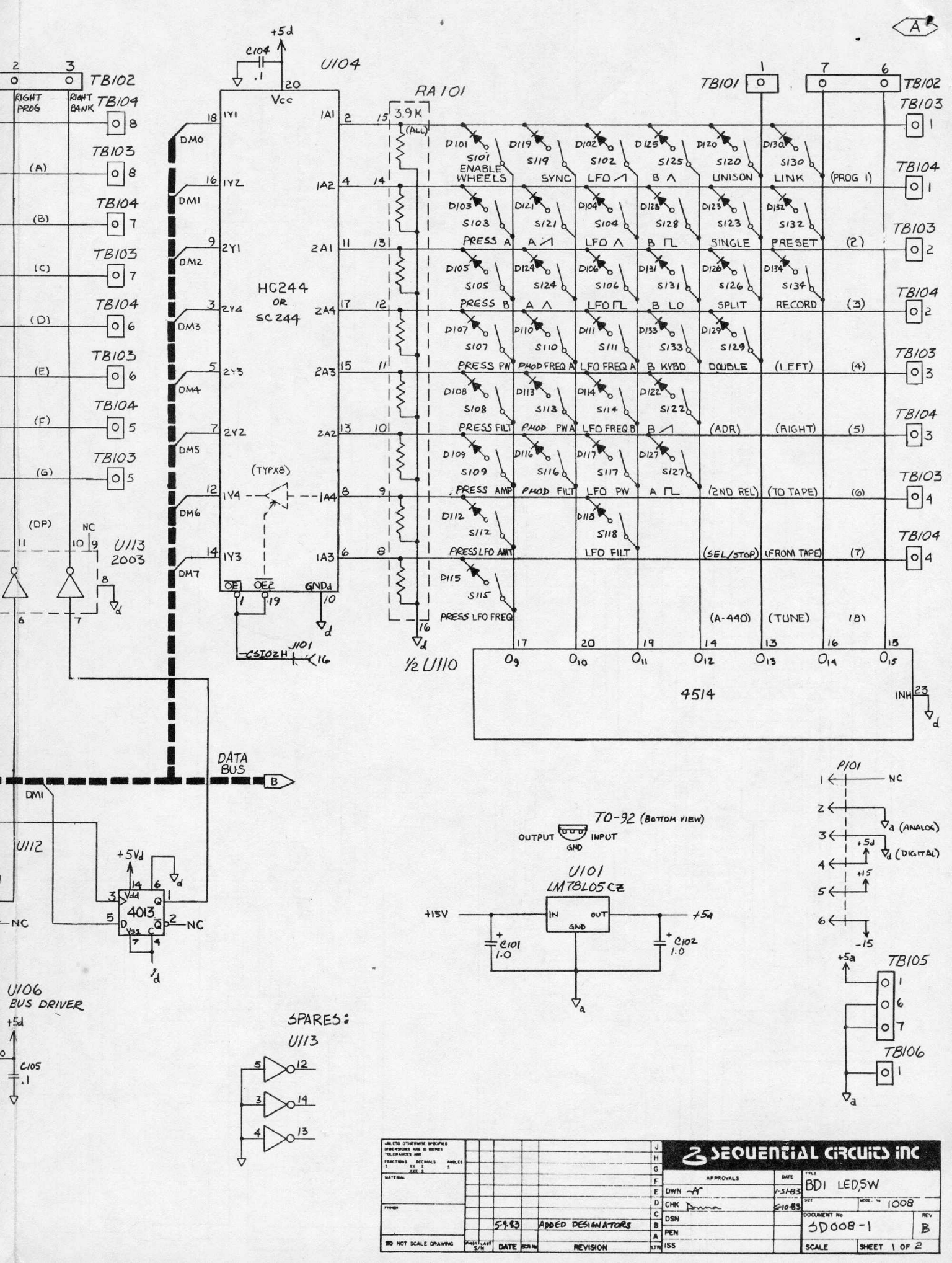

UNLESS OTHERWISE SPECIFIED DIMENSIONS ARE IN INCHES TOLERANCES ARE FRACTIONS ± DECIMALS ± ANGLES ±					
MATERIAL					
FINISH					
DO NOT SCALE DRAWING		5-9-83	ADDED DESIGNATORS		
	PROJ S/N	LAST	DATE	ECN No	REVISION

SEQUENTIAL CIRCUITS INC

APPROVALS	DATE
DWN	1-31-83
CHK	6-10-83
DSN	
PEN	
ISS	

TITLE: BD1 LED,SW

SIZE | MODEL No 1008

DOCUMENT No SD008-1 | REV B

SCALE | SHEET 1 OF 2

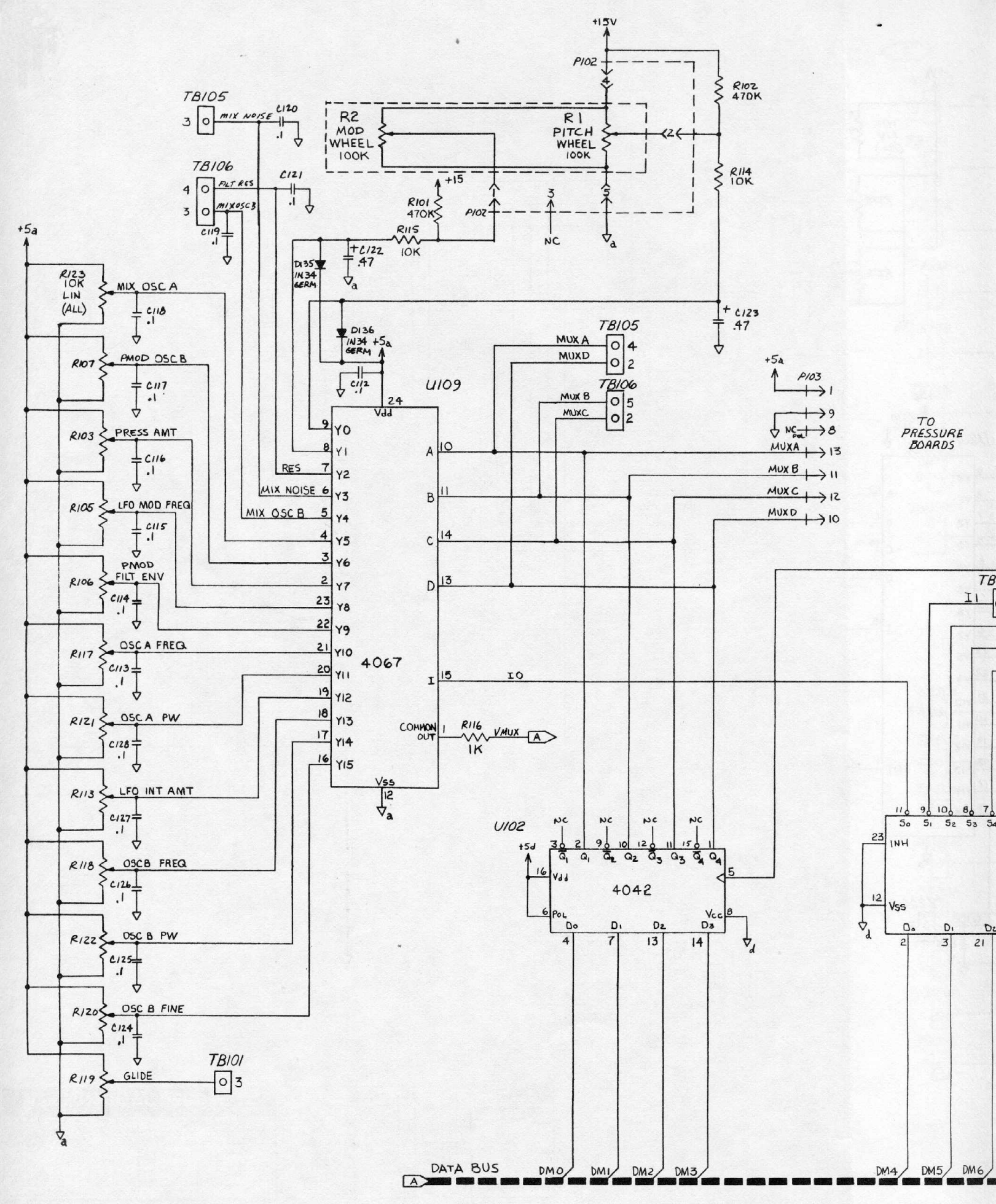
+15V
P102
R102 470K
R114 10K
R2 MOD WHEEL 100K
R1 PITCH WHEEL 100K
TB105
MIX NOISE
C120 .1
TB106
FILT RES
MIX OSC 3
C121 .1
C119 .1
R101 470K
R115 10K
C122 .47
D135 IN34 GERM
D136 IN34 GERM
C123 .47
+5a
R123 10K LIN (ALL)
MIX OSC A
C118 .1
R107
PMOD OSC B
C117 .1
R103
PRESS AMT
C116 .1
R105
LFO MOD FREQ
C115 .1
R106
PMOD FILT ENV
C114 .1
R117
OSC A FREQ
C113 .1
R121
OSC A PW
C128 .1
R113
LFO INT AMT
C127 .1
R118
OSC B FREQ
C126 .1
R122
OSC B PW
C125 .1
R120
OSC B FINE
C124 .1
R119
GLIDE
TB101
U109
4067
Vdd
Vss
RES
MIX NOISE
MIX OSC B
COMMON OUT
R116 1K
VMUX
TB105
MUX A
MUX D
TB106
MUX B
MUX C
P103
TO PRESSURE BOARDS
U102
4042
Vdd
Vss
Pol
Vcc
INH
DATA BUS
DM0
DM1
DM2
DM3
DM4
DM5
DM6

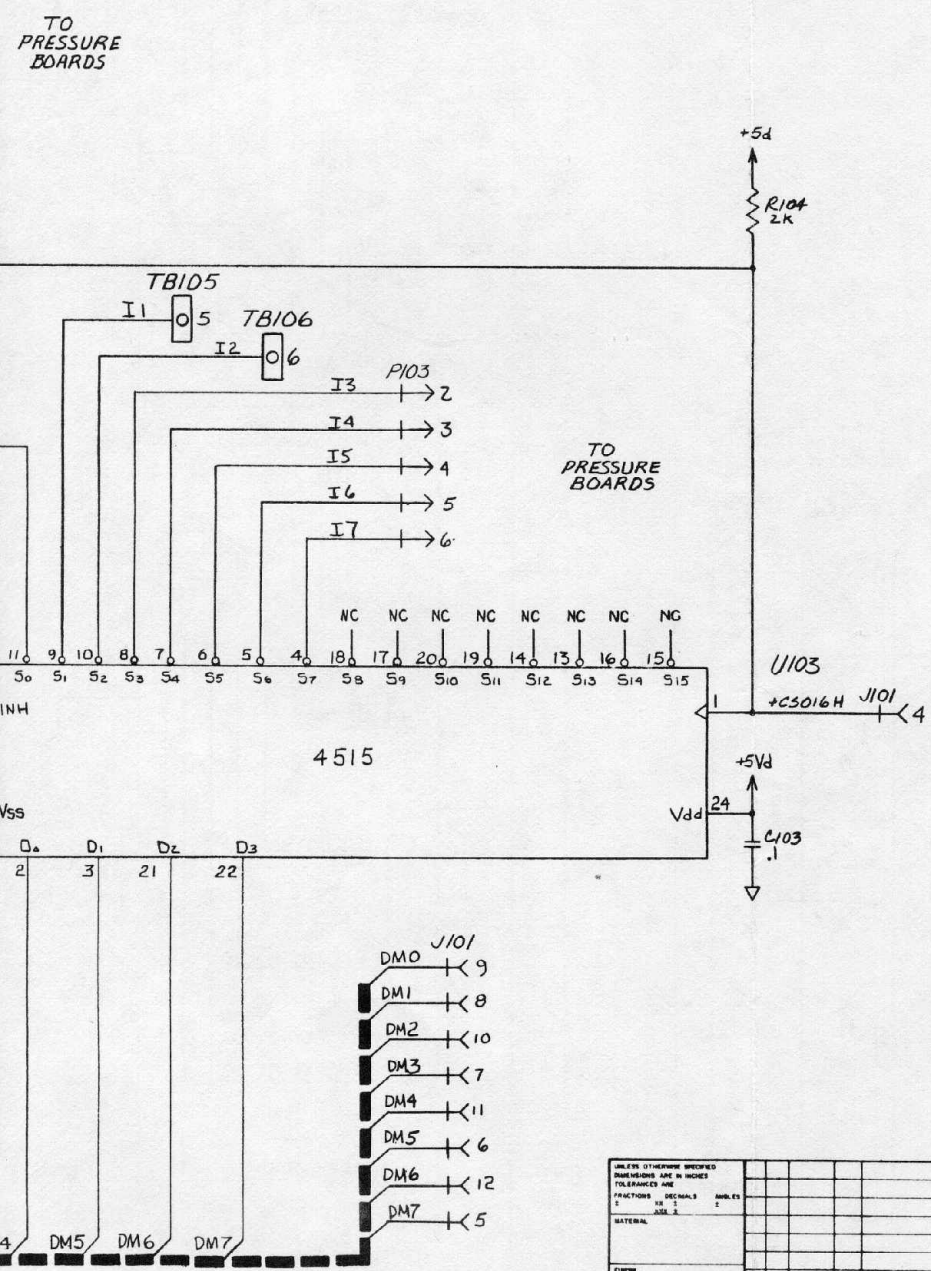

UNLESS OTHERWISE SPECIFIED DIMENSIONS ARE IN INCHES TOLERANCES ARE
FRACTIONS ± DECIMALS ± ANGLES ±
MATERIAL
FINISH
DO NOT SCALE DRAWING

FIRST LAST S/N	DATE	ECR No	REVISION	LTR
	5.9.83		ADDED D135,136 + DESIGNATORS	B

SEQUENTIAL CIRCUITS INC

APPROVALS	DATE
DWN	1-28-83
CHK Donna	6-10-83
DSN	
PEN	
ISS	

TITLE LEFT BD1 FRT PANEL
SIZE
MODEL No 1008
DOCUMENT No SD008-1
REV B
SCALE
SHEET 2 OF 2

C

SWITCHES

ALL DIODES IN914 OR EQUIVALENT

TB202 1 — D203 S203 PROG 1
TB201 1 — D204 S204 P2
TB202 2 — D205 S205 P3
TB201 2 — D201 S201 LEFT, D206 S206 P4
TB202 3 — D212 S212 ADR, D202 S202 RIGHT, D207 S207 P5
TB201 3 — D213 S213 2ND REL, D216 S216 TO TAPE, D208 S208 P6
TB202 4 — D211 S211 SEL/STOP, D217 S217 FROM TAPE, D209 S209 P7
TB201 4 — D219 S214 A-440, D215 S215 TUNE, D210 S210 P8

TB206 1 7 6 TB205

+5Va

10K LIN (ALL) R205 FILT RES → TB203 4
R202 MIX NOISE → TB204 3
R201 MIX OSC B → TB203 3

Va

1a 1b 1c 1d 1e 1f 1g 1D.P.
2a 2b 2c 2d 2e 2f 2g 2D.P.

LEDS

DS201 LEFT BANK / LEFT PROGRAM / RIGHT BANK / RIGHT PROGRAM

TB201 8 — DS205 PROG 1
TB202 8
TB201 7 — DS206 P2
TB202 7 — DS207 P3
TB201 6 — DS203 LEFT, DS208 P4
TB202 6 — DS214 ADR, DS209 RIGHT, DS209 P5
TB201 5 — DS215 2ND REL, DS218 TO TAPE, DS210 P6
TB202 5 — DS213 SEL/STOP, DS219 FROM TAPE, DS211 P7
DS216 A-440, DS217 TUNE, DS212 P8

TB206 7 6 5 TB205 4 5 3 2

+5Va

10K LIN (ALL) R203 FILT CUTOFF C206 .1
R209 FILT KYBD C207 .1
R210 FILT RELEASE C205 .1
R208 FILT SUSTAIN C202 .1
R206 FILT DECAY C204 .1
R204 FILT ATTACK C201 .1
R207 ENV AMT C203 .1
R214 VEL RELEASE C209 .1
R217 VEL FILT C211 .1
R219 VEL AMP C208 .1
R212 VEL ATTACK/DECAY C212 .1
R220 AMP ENV RELEASE C213 .1
R218 AMP ENV SUSTAIN C215 .1
R215 AMP ENV DECAY C214 .1
R213 AMP ENV ATTACK C217 .1

+5a C210 .1

U201 4067
24 Vdd
9 Y0, 8 Y1, 7 Y2, 6 Y3, 5 Y4, 4 Y5, 3 Y6, 2 Y7, 23 Y8, 22 Y9, 21 Y10, 20 Y11, 19 Y12, 18 Y13, 17 Y14, 16 Y15
A 10, B 11, C 14, D 13, I 15
OUT 1 → R211 1K
12 → Va

TB206 GLIDE 3 — C216 .1

+5Va

10K LIN (ALL) R22 PRO
R224 MA
R216 SEQ
Va

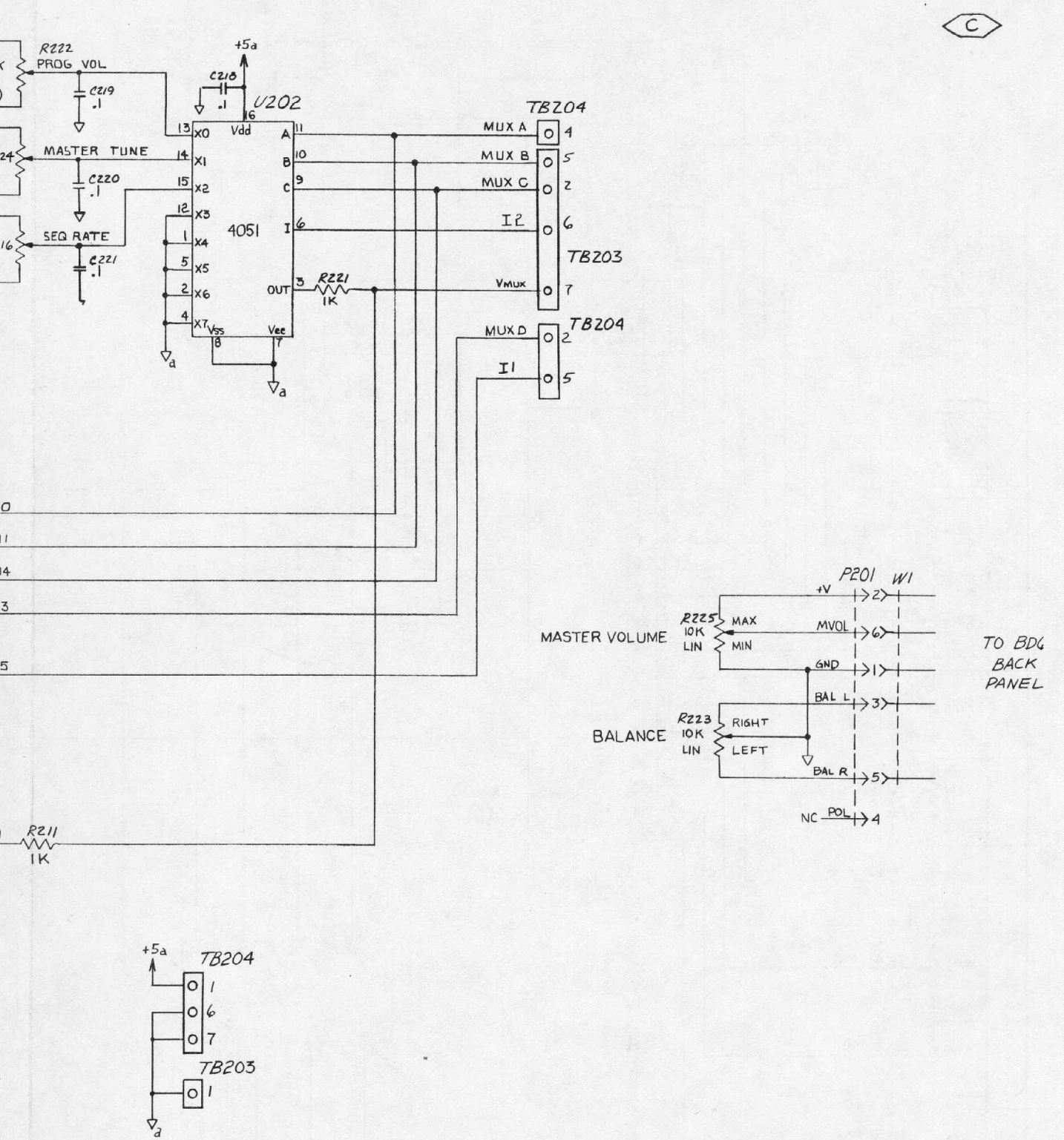

UNLESS OTHERWISE SPECIFIED DIMENSIONS ARE IN INCHES TOLERANCES ARE
FRACTIONS ± DECIMALS .XX ± .XXX ± ANGLES ±
MATERIAL
FINISH
DO NOT SCALE DRAWING

FIRST S/N	LAST S/N	DATE	ECR No	REVISION	LTR
					J
					H
					G
					F
					E
					D
					C
					B
					A

SEQUENTIAL CIRCUITS INC

APPROVALS	DATE
DWN AF	1-31-83
CHK Donna	6-9-83
DSN	
PEN	
ISS	

TITLE PCB2 POTMUX, SW, L.
SIZE
MODEL No 1008
DOCUMENT No SD 008-2-0
REV A
SCALE
SHEET 1 OF 1

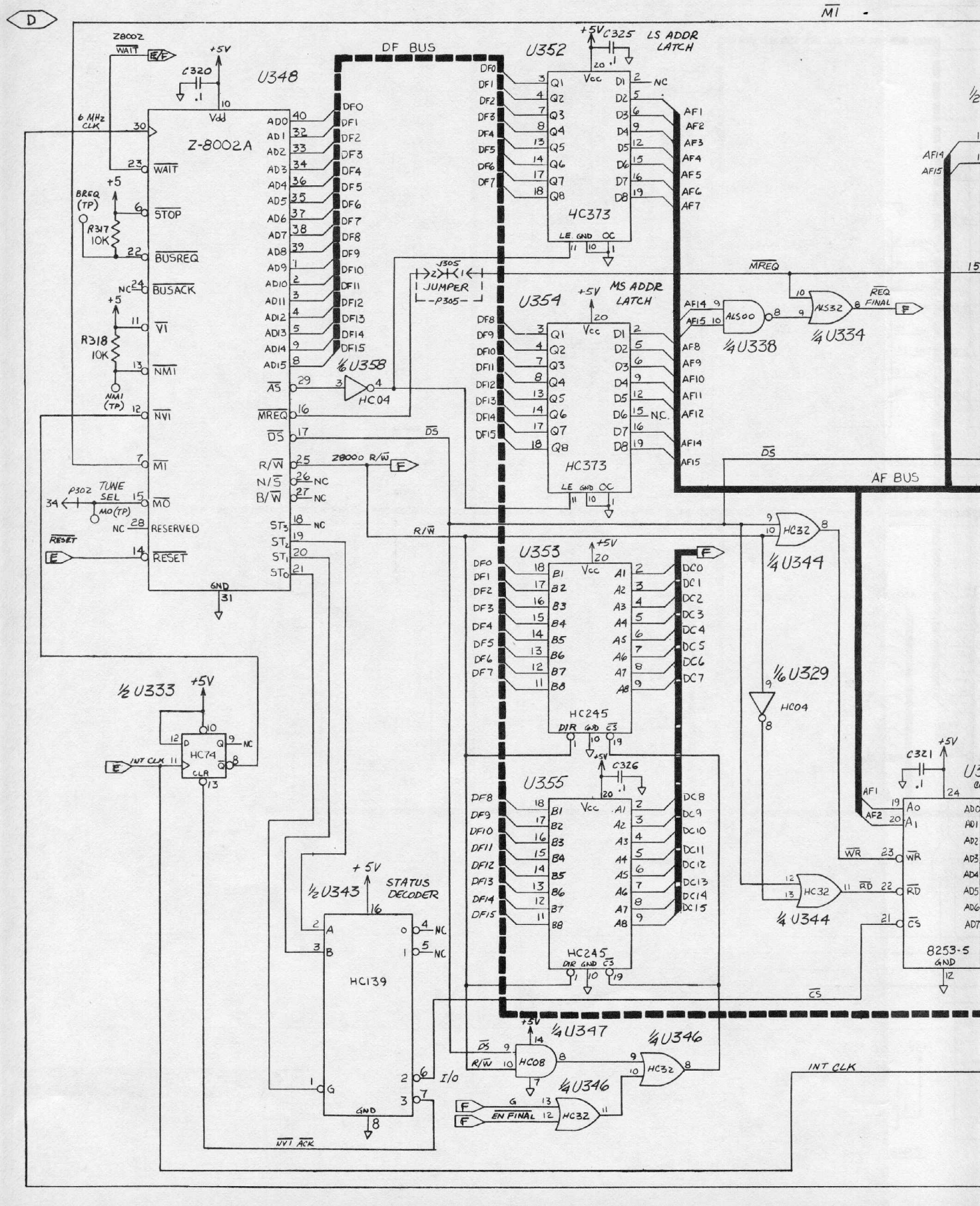
D
MI
Z8002
WAIT
E/F
+5V
C320
.1
U348
Z-8002A
Vdd
6 MHz CLK
WAIT
BREQ (TP)
STOP
R317 10K
BUSREQ
BUSACK
VI
R318 10K
NMI
NMI (TP)
NVI
MI
P302 TUNE SEL
MO
MO(TP)
RESERVED
RESET
GND
AD0
AD1
AD2
AD3
AD4
AD5
AD6
AD7
AD8
AD9
AD10
AD11
AD12
AD13
AD14
AD15
AS
MREQ
DS
R/W
N/S
B/W
ST3
ST2
ST1
ST0
DF BUS
DF0
DF1
DF2
DF3
DF4
DF5
DF6
DF7
DF8
DF9
DF10
DF11
DF12
DF13
DF14
DF15
Z8000 R/W
U352
4C373
LE GND OC
LS ADDR LATCH
C325
AF1
AF2
AF3
AF4
AF5
AF6
AF7
J305
JUMPER
P305
U354
HC373
MS ADDR LATCH
AF8
AF9
AF10
AF11
AF12
AF14
AF15
N.C.
AF BUS
1/6 U358
HC04
ALS00
1/4 U338
ALS32
1/4 U334
REQ FINAL
1/4 U344
HC32
U353
HC245
DIR GND CS
DC0
DC1
DC2
DC3
DC4
DC5
DC6
DC7
U355
C326
DC8
DC9
DC10
DC11
DC12
DC13
DC14
DC15
1/6 U329
C321
8253-5
WR
RD
CS
1/2 U333
HC74
INT CLK
CLR
1/2 U343
STATUS DECODER
HC139
I/O
1/4 U347
HC08
1/4 U346
EN FINAL
INT ACK
INT CLK

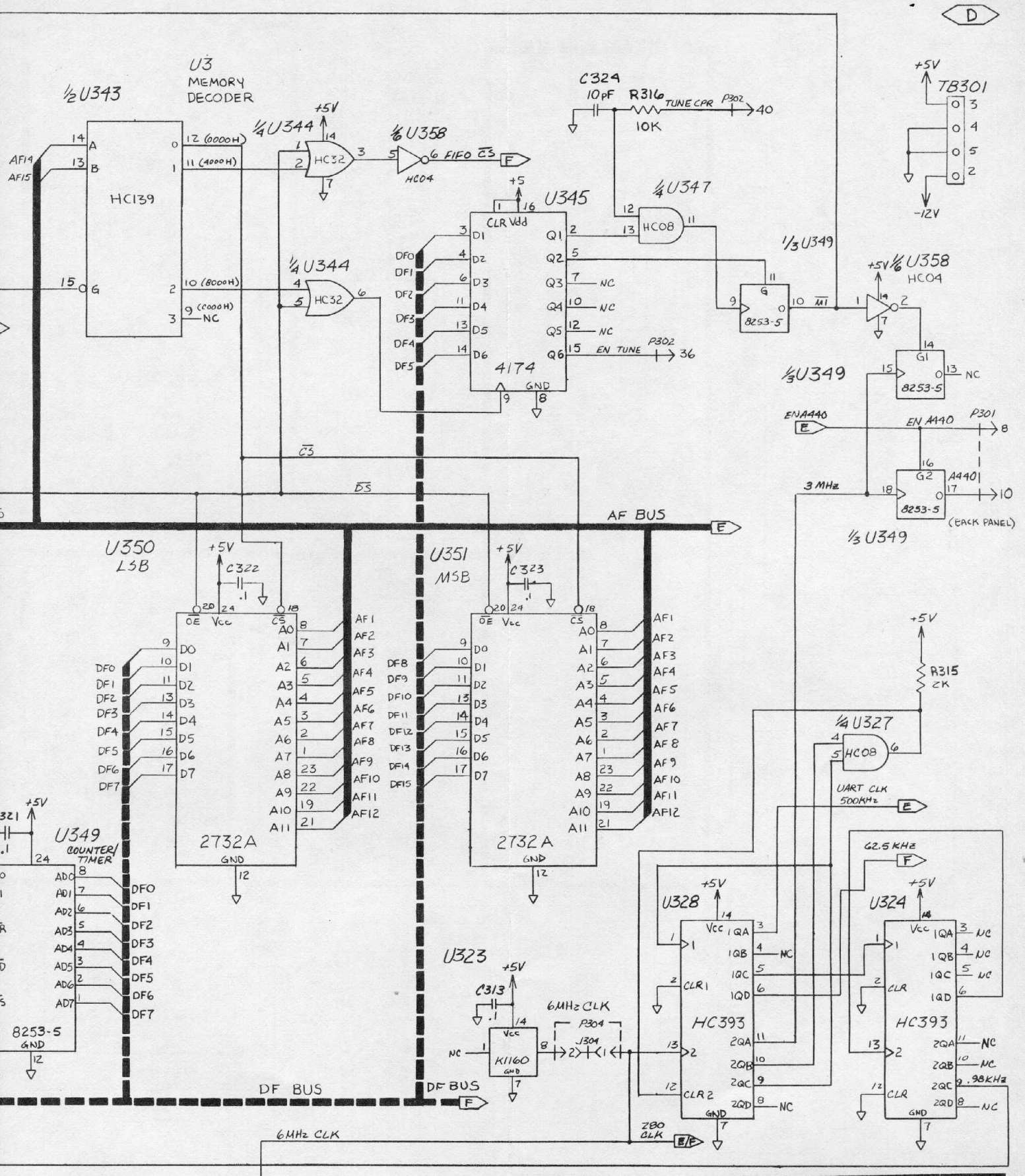

UNLESS OTHERWISE SPECIFIED DIMENSIONS ARE IN INCHES TOLERANCES ARE FRACTIONS ± DECIMALS ± ANGLES ±					
MATERIAL					
FINISH					
DO NOT SCALE DRAWING	FIRST S/N	LAST S/N	DATE 5/27/83	ECR No	REVISION

SEQUENTIAL CIRCUITS INC

APPROVALS		DATE
DWN	AY	2/18/83
CHK	Donna	6/10/83
DSN		
PEN		
ISS		

TITLE: FINAL CPU

SIZE | MODEL No: 1008

DOCUMENT No: SD008-3 | REV: B

SCALE | SHEET 1 OF 3

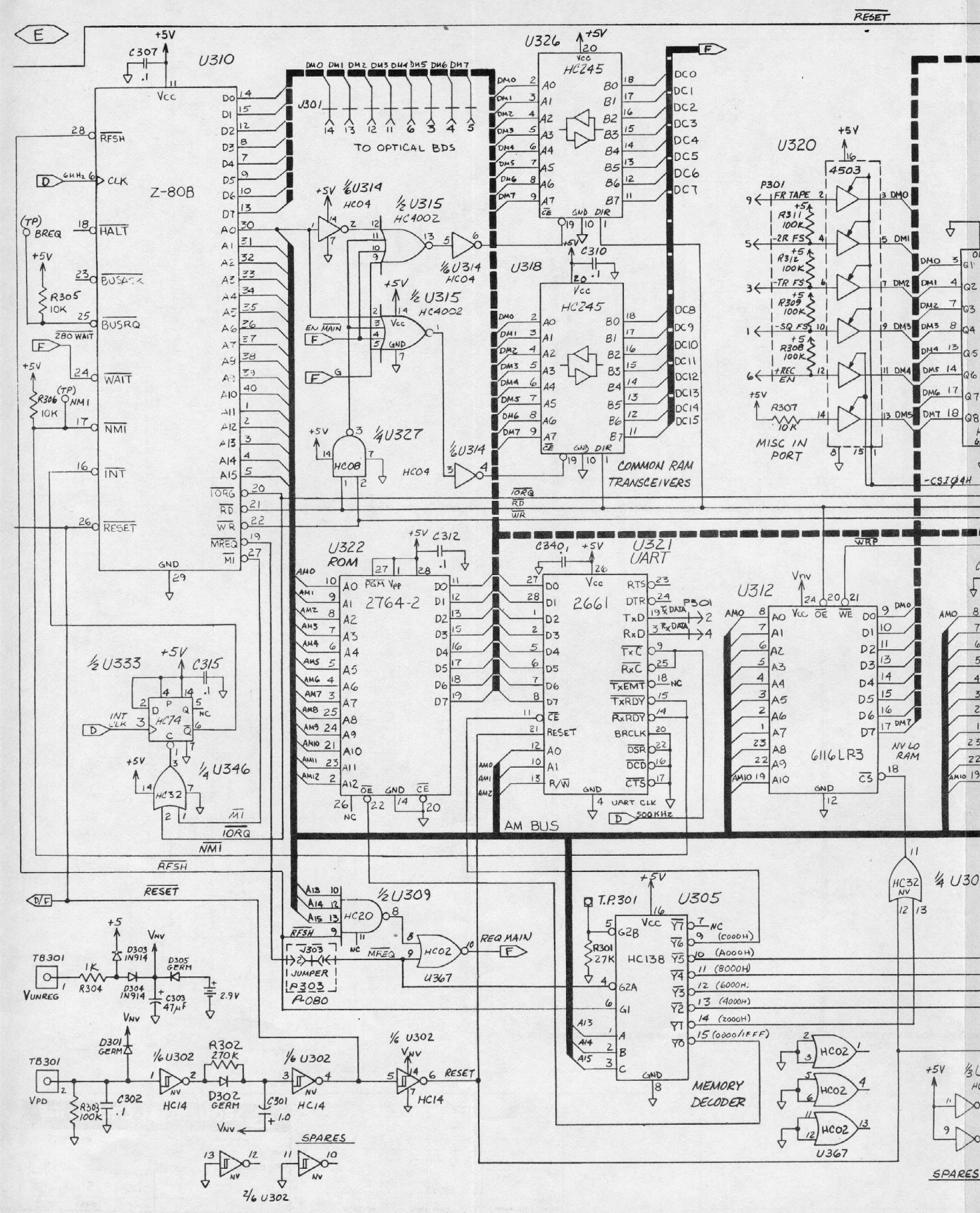

E
RESET
U310
Z-80B
C307
+5V
Vcc
RFSH
CLK
HALT
BUSACK
BUSRQ
WAIT
NMI
INT
RESET
IORQ
RD
WR
MREQ
MI
GND
R305 10K
R306 10K
(TP) BREQ
280 WAIT
J301
TO OPTICAL BDS
U326
HC245
U318
HC245
C310
COMMON RAM TRANSCEIVERS
U320
4503
P301
FR TAPE
R311 100K
-2R FS
R312 100K
-TR FS
R309 100K
-SQ FS
R308 100K
+REC EN
R307 10K
MISC IN PORT
-CSIØ4H
1/6 U314 HC04
1/2 U315 HC4002
1/4 U327 HC08
EN MAIN
U322 ROM
2764-2
C312
U321 UART
2661
C340
P301
TxD DATA
RxD DATA
UART CLK
500KHz
AM BUS
U312
6116LR3
NV LO RAM
WRP
1/2 U333
HC74
C315
INT CLK
1/4 U346
HC32
1/2 U309
HC20
HC02
U367
REQ MAIN
J303 JUMPER
P303
P-080
T.P.301
U305
HC138
R301 27K
MEMORY DECODER
(C000H)
(A000H)
(8000H)
(6000H)
(4000H)
(2000H)
(0000/1FFF)
HC32
1/4 U30
TB301
VUNREG
R304 1K
D303 1N914
D304 1N914
D305 GERM
C303 47µF
2.9V
D301 GERM
TB301
VPD
R303 100K
C302
1/6 U302
HC14
R302 270K
D302 GERM
C301 1.0
SPARES
2/6 U302

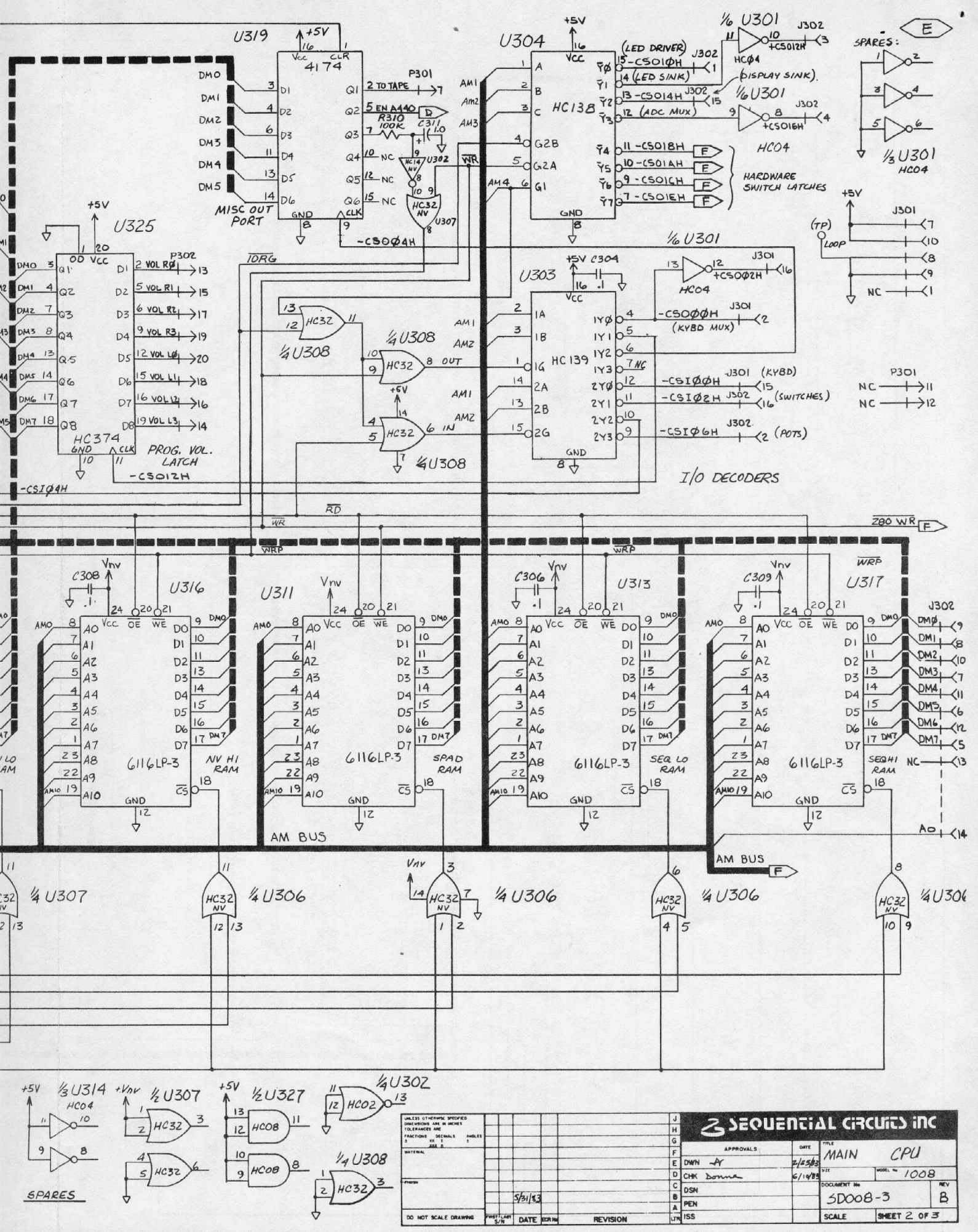

U319
4174
MISC OUT PORT
2 TO TAPE
5 EN A440
R310 100K
C311 1.0
U304
HC138
(LED DRIVER)
(LED SINK)
(DISPLAY SINK)
(ADC MUX)
HARDWARE SWITCH LATCHES
1/6 U301
HC04
SPARES:
1/3 U301
HC04
U325
HC374
PROG. VOL. LATCH
-CSIØ4H
-CSO12H
U303
HC139
1/6 U301
HC04
(KYBD MUX)
(KYBD)
(SWITCHES)
(POTS)
I/O DECODERS
1/4 U308
1/4 U308
1/4 U308
Z80 WR
U316
6116LP-3
NV HI RAM
U311
6116LP-3
SPAD RAM
AM BUS
U313
6116LP-3
SEQ LO RAM
U317
6116LP-3
SEQ HI RAM
AM BUS
1/4 U307
1/4 U306
1/4 U306
1/4 U306
1/4 U306
1/3 U314
HC04
SPARES
1/2 U307
1/2 U327
1/4 U302
1/4 U308
UNLESS OTHERWISE SPECIFIED DIMENSIONS ARE IN INCHES TOLERANCES ARE
FRACTIONS DECIMALS ANGLES
MATERIAL
FINISH
DO NOT SCALE DRAWING
5/31/83
DATE
REVISION
SEQUENTIAL CIRCUITS INC
APPROVALS
DATE
DWN
CHK Donna
DSN
PEN
ISS
2/25/83
6/10/83
TITLE MAIN CPU
SIZE
MODEL No 1008
DOCUMENT No SD008-3
REV B
SCALE
SHEET 2 OF 3

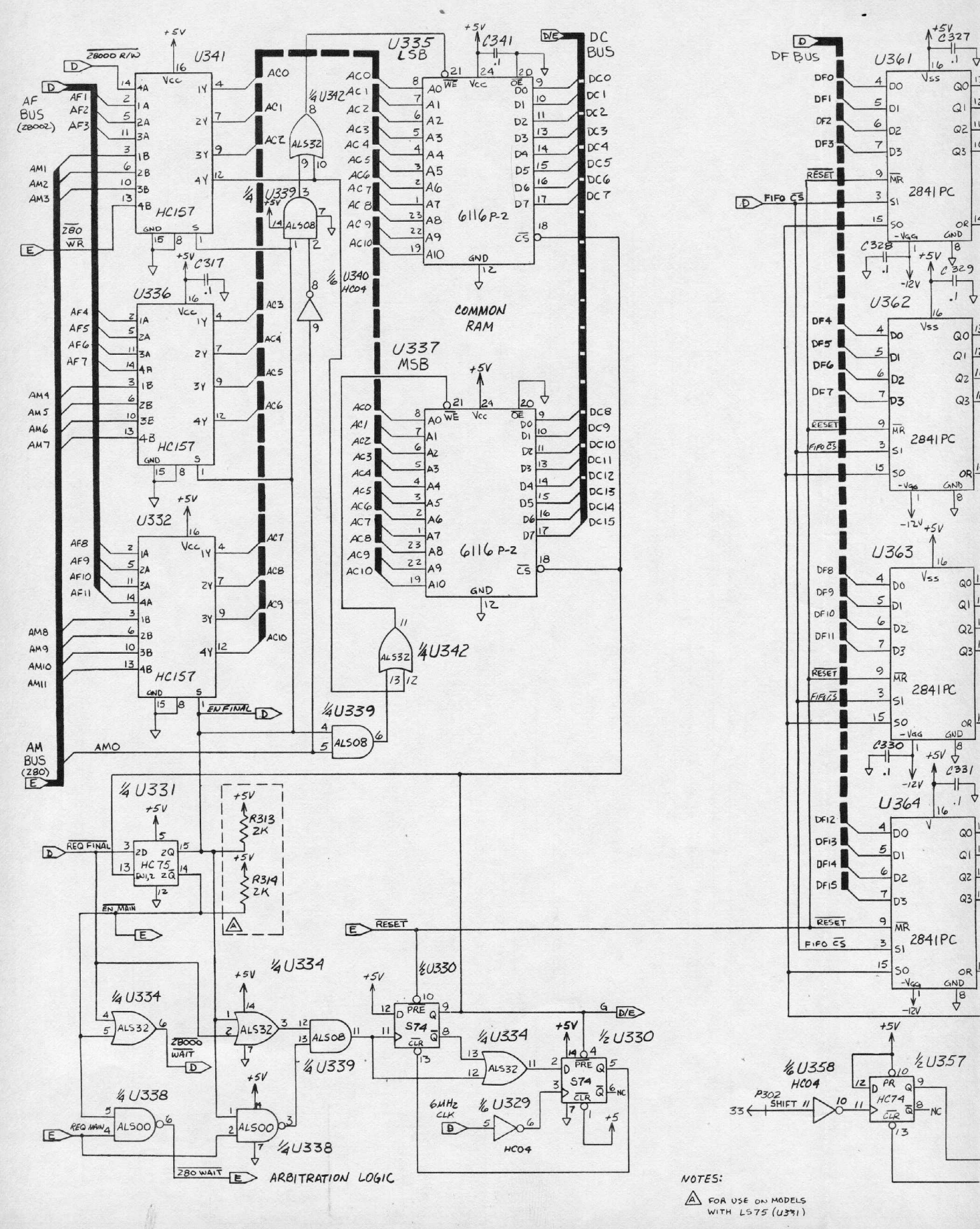
U341
U335 LSB
U337 MSB
U336
U332
U339
U342
U340 HC04
COMMON RAM
6116 P-2
HC157
ALS32
ALS08
C341
C317
DC BUS
AF BUS (Z8002)
AM BUS (Z80)
Z8000 R/W
Z80 WR
EN FINAL
AMO
U331
HC75
R313 2K
R314 2K
REQ FINAL
EN MAIN
U334
U338
ALS00
U330
S74
U329
6MHz CLK
HC04
Z8000 WAIT
280 WAIT
REQ MAIN
ARBITRATION LOGIC
DF BUS
U361
U362
U363
U364
2841PC
C327
C328
C329
C330
C331
U358
HC04
U357
HC74
P302 SHIFT
NOTES:
A FOR USE ON MODELS WITH LS75 (U331)

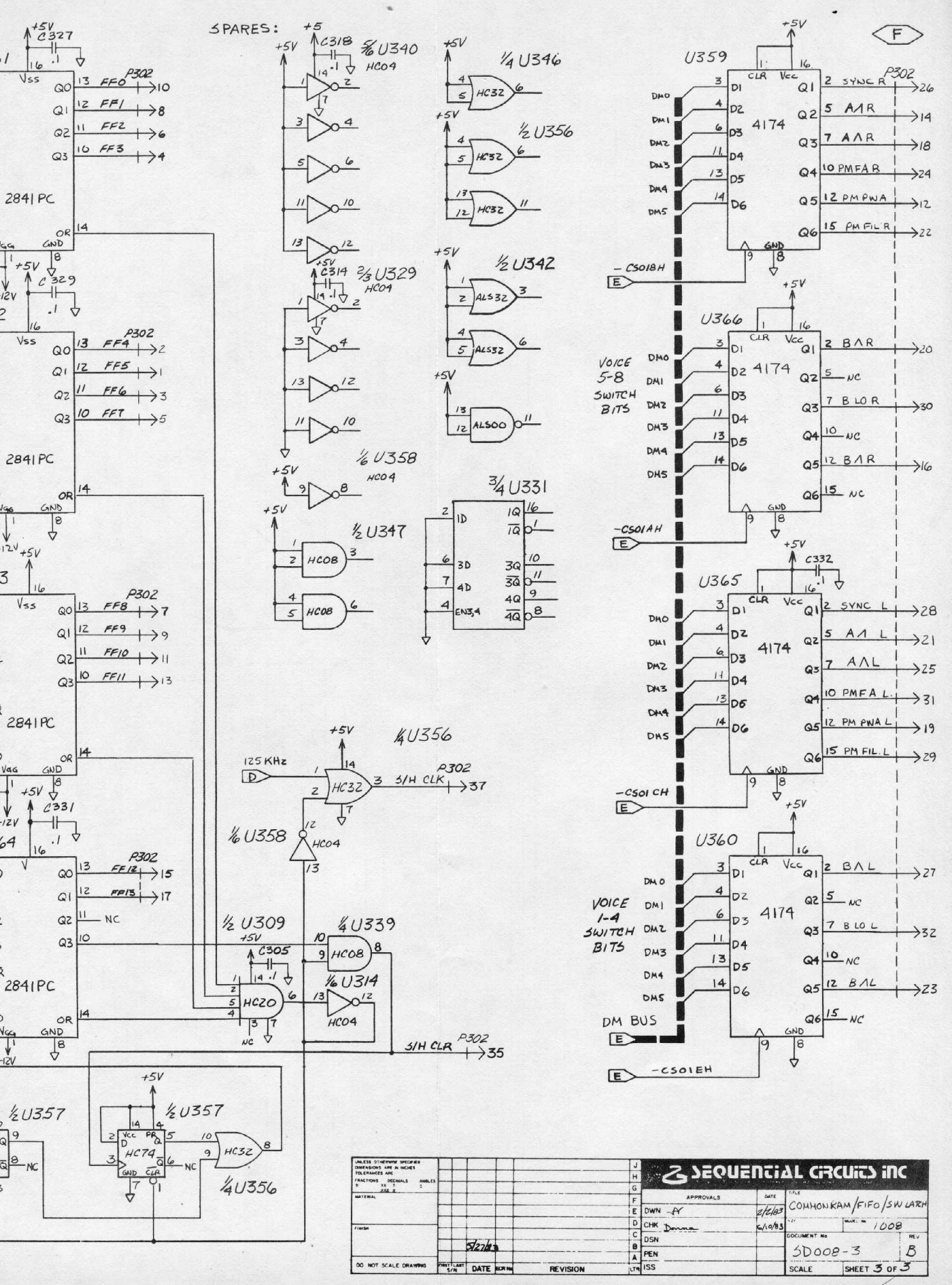

UNLESS OTHERWISE SPECIFIED DIMENSIONS ARE IN INCHES TOLERANCES ARE: FRACTIONS DECIMALS ANGLES							
MATERIAL							
FINISH							
DO NOT SCALE DRAWING							

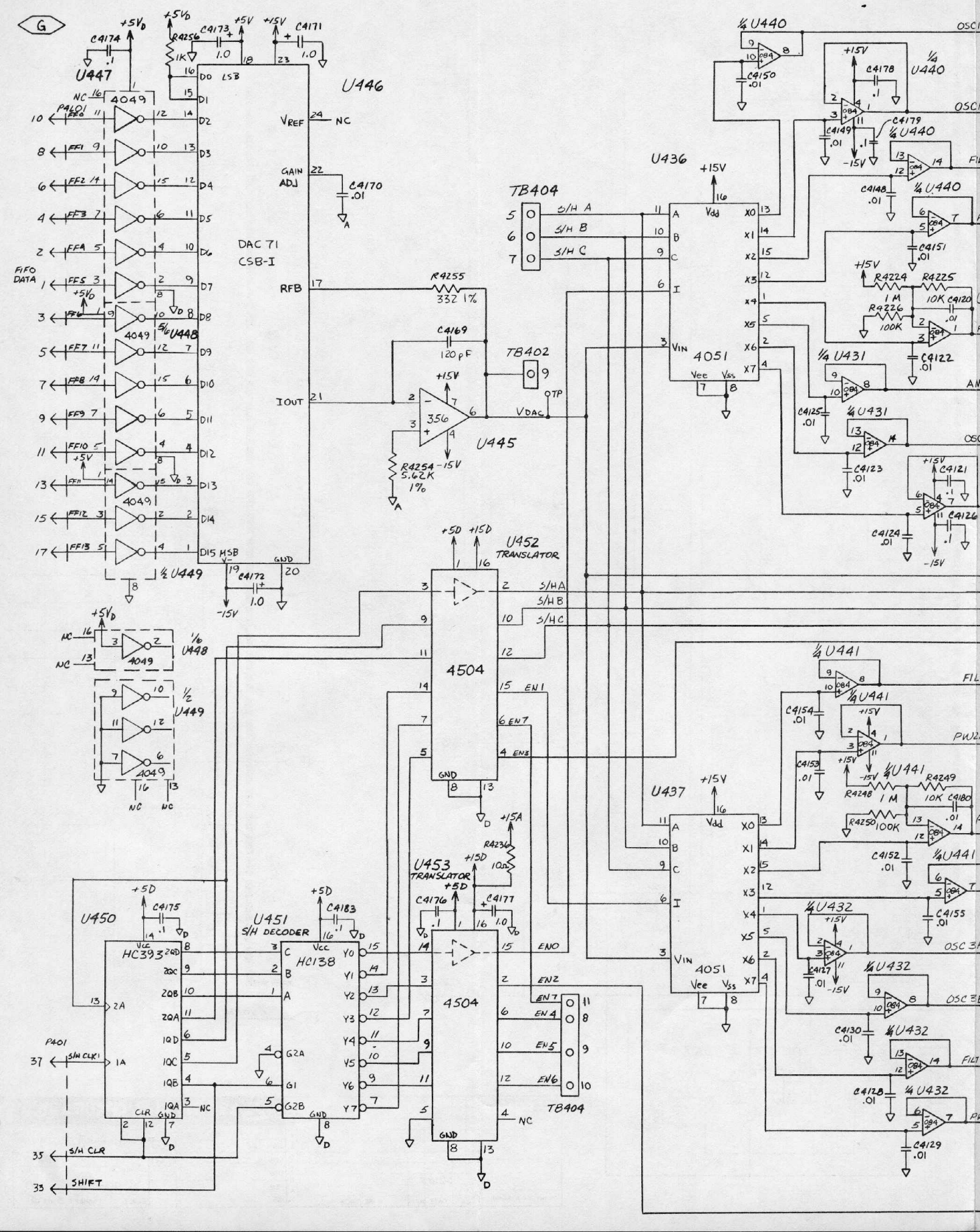
G
U447
4049
P4L01
FIFO DATA
U446
DAC 71
CSB-I
VREF
GAIN ADJ
RFB
IOUT
LSB
MSB
GND
R4256 1K
C4174 .1
C4173 1.0
C4171 1.0
C4170 .01
C4172 1.0
R4255 332 1%
C4169 120 pF
TB402
U445
356
R4254 5.62K 1%
VDAC
TP
TB404
S/H A
S/H B
S/H C
U436
4051
Vdd
Vee
Vss
VIN
1/4 U440
C4150 .01
C4178 .1
C4149 .01
C4179 .1
C4148 .01
C4151 .01
R4224 1 M
R4225 10K
R4226 100K
C4120 .01
C4122 .01
1/4 U431
C4125 .01
C4123 .01
C4121 .1
C4126 .1
C4124 .01
U452 TRANSLATOR
4504
S/H A
S/H B
S/H C
EN1
EN7
EN3
1/6 U448
1/2 U449
U437
4051
1/4 U441
C4154 .01
C4153 .01
R4248 1 M
R4249 10K
R4250 100K
C4180 .01
C4152 .01
C4155 .01
1/4 U432
C4127 .01
C4130 .01
C4128 .01
C4129 .01
U453 TRANSLATOR
R4236 10Ω
C4176 .1
C4177 1.0
EN0
EN2
EN4
EN5
EN6
TB404
U450
HC393
C4175 .1
P401
S/H CLK1
S/H CLR
SHIFT
U451 S/H DECODER
HC138
C4183 .1
G2A
G1
G2B
+5V
+15V
-15V
+5D
+15A
OSC1
OSC3
FILT
PW2
AM

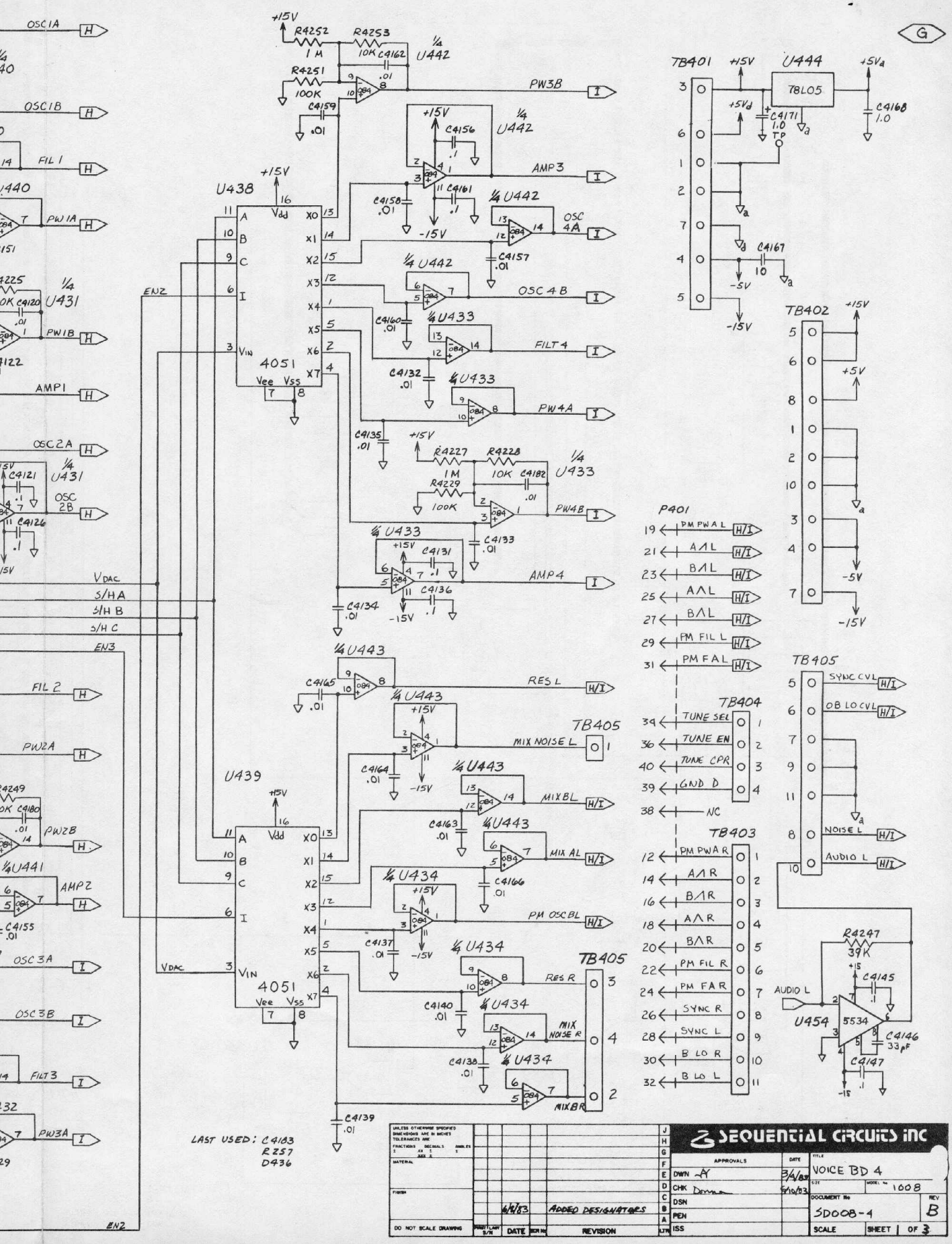
G
OSC1A
OSC1B
FIL 1
PW1A
PW1B
AMP1
OSC2A
OSC 2B
FIL 2
PW2A
PW2B
AMP2
OSC3A
OSC3B
FILT3
PW3A
EN2
EN3
VDAC
S/H A
S/H B
S/H C
U438
4051
U439
4051
+15V
-15V
R4252 1M
R4253 10K
R4251 100K
C4162 .01
C4159 .01
1/4 U442
PW3B
AMP3
C4156 .1
C4161 .1
C4158 .01
OSC 4A
C4157 .01
OSC 4B
C4160 .01
1/4 U433
FILT4
C4132 .01
PW4A
C4135 .01
R4227 1M
R4228 10K
R4229 100K
C4182 .01
PW4B
C4133 .01
C4131 .1
C4136 .1
AMP4
C4134 .01
1/4 U443
C4165 .01
RES L
MIX NOISE L
C4164 .01
MIX BL
C4163 .01
MIX AL
C4166 .01
1/4 U434
PM OSC BL
C4137 .01
RES R
C4140 .01
MIX NOISE R
C4138 .01
MIX BR
C4139 .01
TB405
TB401
U444
78L05
C4171 1.0 TP
C4168 1.0
C4167 10
TB402
P401
PM PWA L
A∧L
B∧L
PM FIL L
PM FA L
TB404
TUNE SEL
TUNE EN
TUNE CPR
GND D
NC
TB403
PM PWA R
A∧R
B∧R
PM FIL R
PM FA R
SYNC R
SYNC L
B LO R
B LO L
SYNC CVL
OB LO CVL
NOISE L
AUDIO L
R4247 39K
C4145 .1
U454
5534
C4146 33pF
C4147 .1
LAST USED: C4183
R257
D436
UNLESS OTHERWISE SPECIFIED DIMENSIONS ARE IN INCHES TOLERANCES ARE
FRACTIONS ± DECIMALS ± ANGLES ±
MATERIAL
FINISH
DO NOT SCALE DRAWING
6/8/83
ADDED DESIGNATORS
DATE
REVISION
SEQUENTIAL CIRCUITS INC
APPROVALS
DATE
DWN
CHK
DSN
PEN
ISS
3/4/83
5/10/83
TITLE
VOICE BD 4
SIZE
MODEL No 1008
DOCUMENT No
SD008-4
REV
B
SCALE
SHEET 1 OF 3

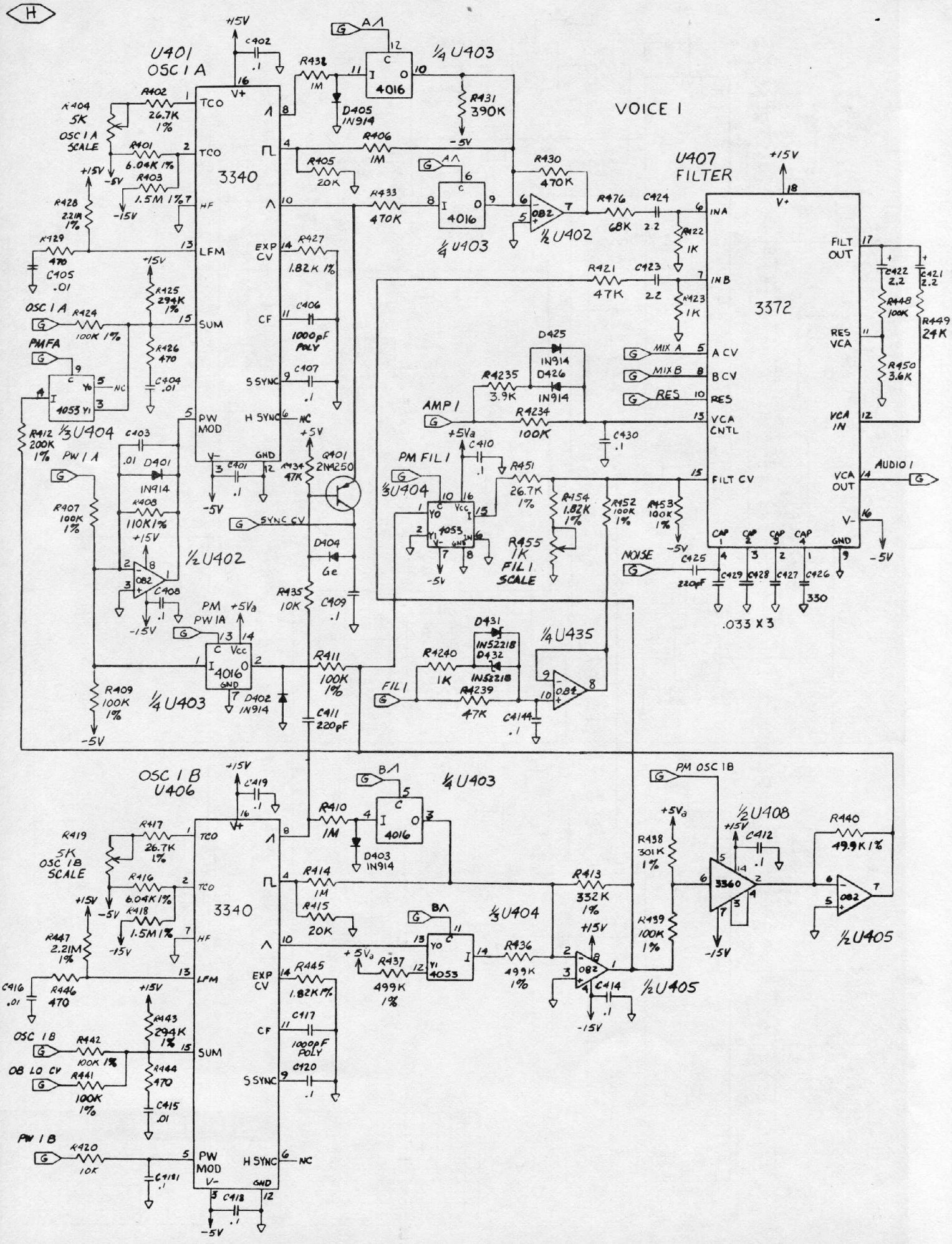
H
U401
OSC 1 A
3340
VOICE 1
U407
FILTER
3372
OSC 1 B
U406
3340
1/4 U403
1/4 U403
1/4 U403
1/2 U402
1/2 U402
1/3 U404
1/3 U404
1/4 U435
1/2 U408
1/2 U405
1/2 U405
R404
5K
OSC 1 A
SCALE
R419
5K
OSC 1 B
SCALE
R455
1K
FIL 1
SCALE
AMP 1
PM FIL 1
PM PW 1A
PM OSC 1B
OSC 1 A
PMFA
PW 1 A
OSC 1 B
OB LO CV
PW 1 B
NOISE
AUDIO 1
.033 X 3
Q401
2N4250
D405
1N914
D402
1N914
D403
1N914
D404
Ge
D425
1N914
D426
1N914
D431
1N5221B
D432
1N5221B
D401
1N914
D402
1N914
D403
1N914
R432
1M
R431
390K
R406
1M
R405
20K
R433
470K
R430
470K
R476
68K
C424
2.2
R422
1K
R421
47K
C423
2.2
R423
1K
R427
1.82K 1%
C406
1000pF
POLY
C407
.1
R425
294K
1%
R424
100K 1%
R426
470
C404
.01
R412
200K
1%
C403
.01
R407
100K
1%
R408
110K 1%
C408
.1
R434
47K
R435
10K
C409
.1
R411
100K
1%
C411
220pF
R409
100K
1%
R4235
3.9K
R4234
100K
C430
.1
C410
.1
R451
26.7K
1%
R454
1.82K
1%
R452
100K
1%
R453
100K
1%
R4240
1K
R4239
47K
C4144
.1
C425
220pF
C429
C428
C427
C426
330
C422
2.2
C421
2.2
R448
100K
R449
24K
R450
3.6K
R417
26.7K
1%
R416
6.04K 1%
R418
1.5M 1%
R447
2.21M
1%
R446
470
C416
.01
R443
294K
1%
R442
100K 1%
R441
100K
1%
R444
470
C415
.01
R420
10K
C4181
.1
C419
.1
R410
1M
R414
1M
R415
20K
R445
1.82K 1%
C417
1000pF
POLY
C420
.1
R437
499K
1%
R436
499K
1%
R413
332K
1%
C414
.1
R438
301K
1%
R439
100K
1%
C412
.1
R440
49.9K 1%
C418
.1
+15V
-5V
-15V
+5Va
+5V
-5V

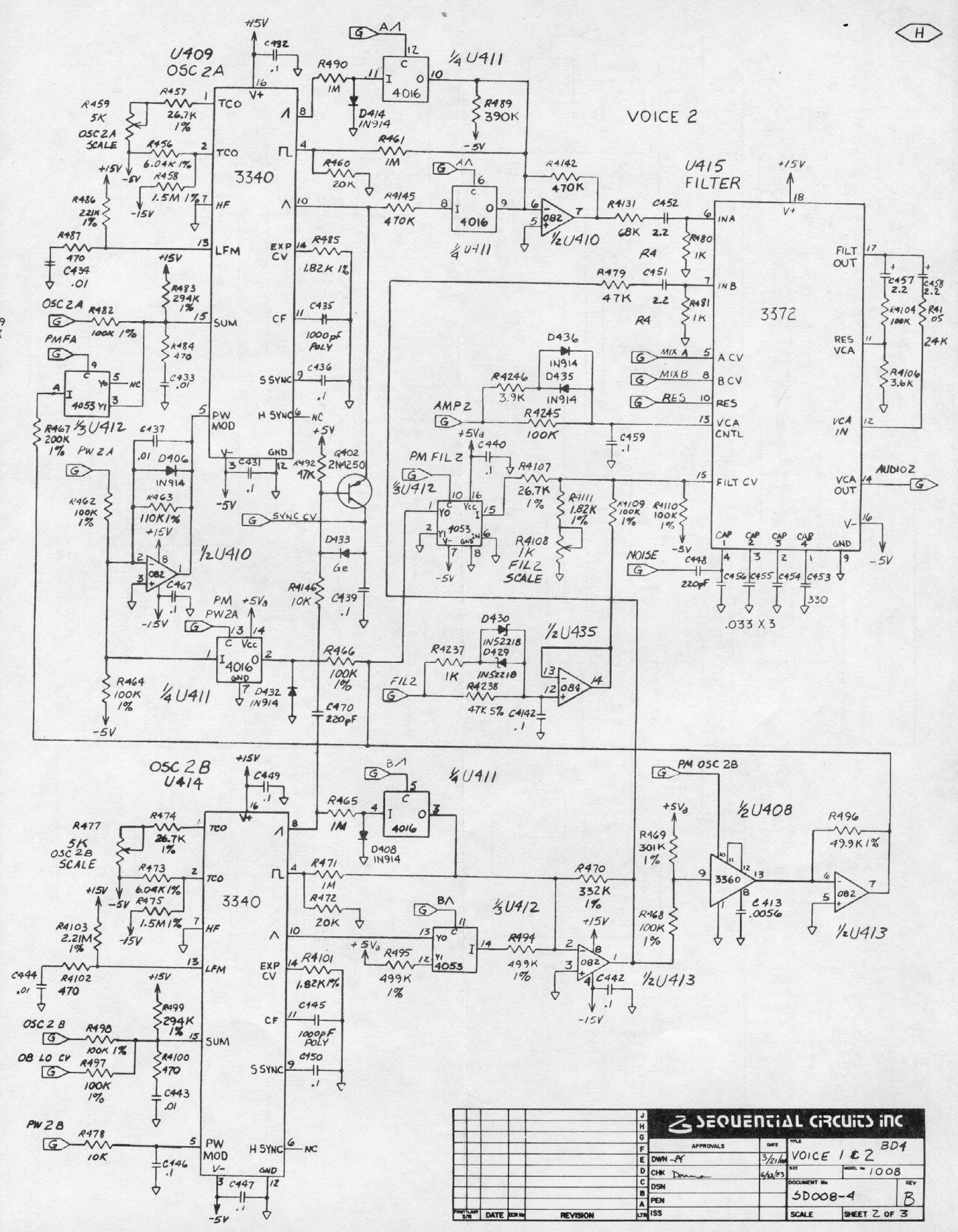
H
U409
OSC 2A
3340
VOICE 2
U415
FILTER
3372
OSC 2B
U414
3340
1/4 U411
1/2 U410
1/3 U412
1/2 U435
1/2 U408
1/2 U413
1/3 U412
1/2 U413
R459 5K OSC 2A SCALE
R477 5K OSC 2B SCALE
R4108 1K FIL 2 SCALE
PM FIL 2
AMP 2
PM OSC 2B
OSC 2A
PMFA
PW 2A
PW 2B
OSC 2B
OB LO CV
NOISE
AUDIO 2
.033 X 3
SEQUENTIAL CIRCUITS INC
VOICE 1 & 2
BD4
1008
SD008-4
B
SHEET 2 OF 3

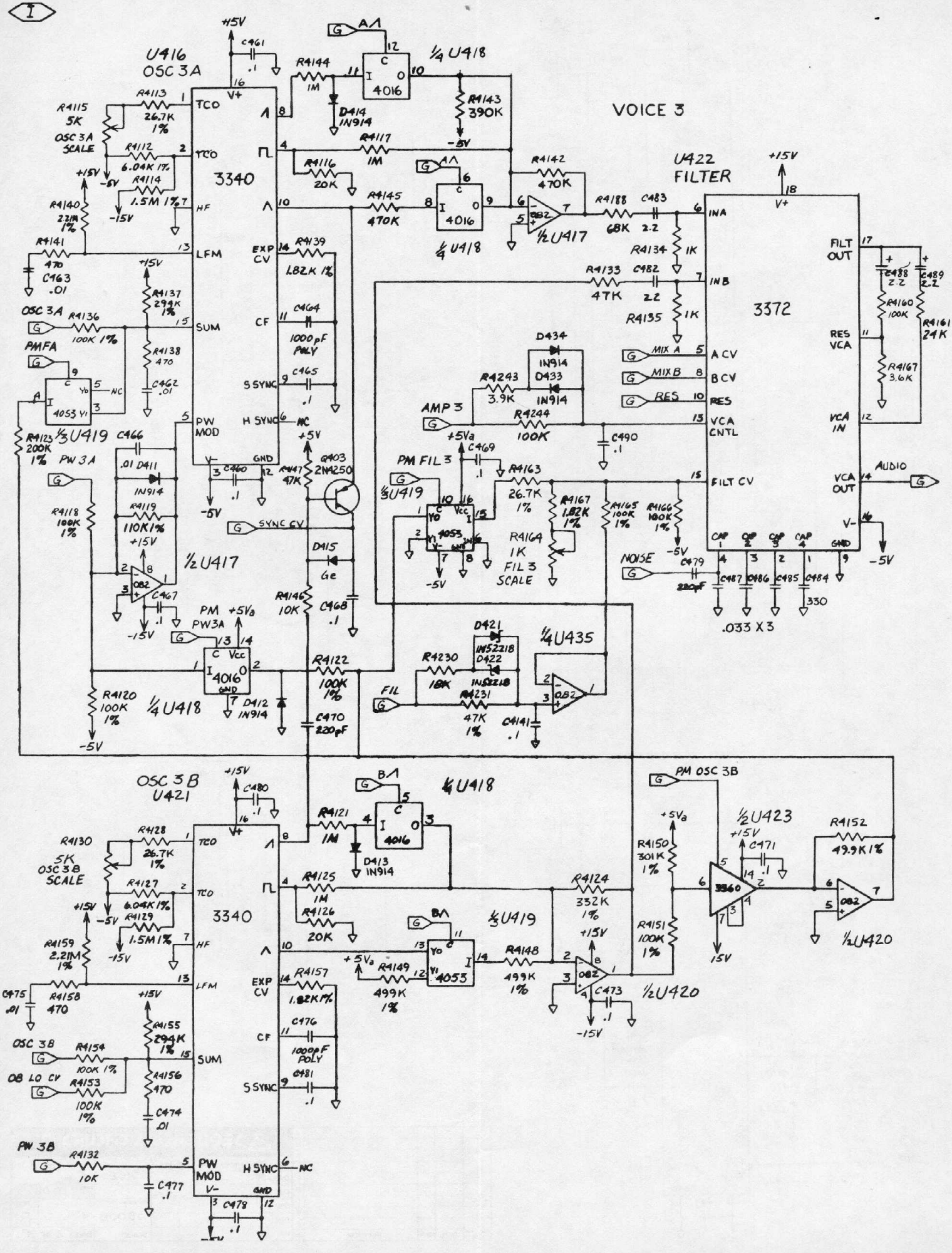

I
VOICE 3
U416
OSC 3A
3340
U422
FILTER
3372
OSC 3B
U421
3340
¼ U418
½ U417
⅓ U419
4053
4016
¼ U435
½ U423
3360
½ U420
R4115 5K OSC 3A SCALE
R4113 26.7K 1%
R4112 6.04K 1%
R4114 1.5M 1%
R4140 2.21M 1%
R4141 470
C463 .01
R4136 100K 1%
R4137 294K 1%
R4138 470
C462 .01
R4123 200K 1%
R4118 100K 1%
R4119 110K 1%
R4120 100K 1%
R4144 1M
D414 1N914
R4143 390K
R4117 1M
R4116 20K
R4145 470K
R4142 470K
R4139 1.82K 1%
C464 1000pF POLY
C465 .1
C466 .01
D411 1N914
C467 .1
C460 .1
R4147 47K
Q403 2N4250
D415 Ge
R4146 10K
C468 .1
R4122 100K 1%
C470 220pF
D412 1N914
R4188 68K
C483 2.2
R4134 1K
R4133 47K
C482 2.2
R4135 1K
D434 1N914
D433 1N914
R4243 3.9K
R4244 100K
C490 .1
C469 .1
R4163 26.7K 1%
R4167 1.82K 1%
R4165 100K 1%
R4166 100K 1%
R4164 1K FIL 3 SCALE
C479 220pF
C487 C486 C485 C484 330
.033 X 3
D421 IN5221B
D422 IN5221B
R4230 18K
R4231 47K 1%
C4141 .1
R4128 26.7K 1%
R4127 6.04K 1%
R4129 1.5M 1%
R4159 2.21M 1%
R4158 470
C475 .01
R4155 294K 1%
R4156 470
C474 .01
R4132 10K
C477 .1
C480 .1
R4121 1M
D413 IN914
R4125 1M
R4126 20K
R4157 1.82K 1%
C476 1000pF POLY
C481 .1
R4149 499K 1%
R4148 499K 1%
R4124 332K 1%
C473 .1
C478 .1
R4150 301K 1%
R4151 100K 1%
C471 .1
R4152 49.9K 1%
OSC 3A
PMFA
PW 3A
SYNC CV
PM PW3A
FIL
AMP 3
PM FIL 3
NOISE
MIX A
MIX B
RES
AUDIO
PM OSC 3B
OSC 3B
OB LO CV
PW 3B

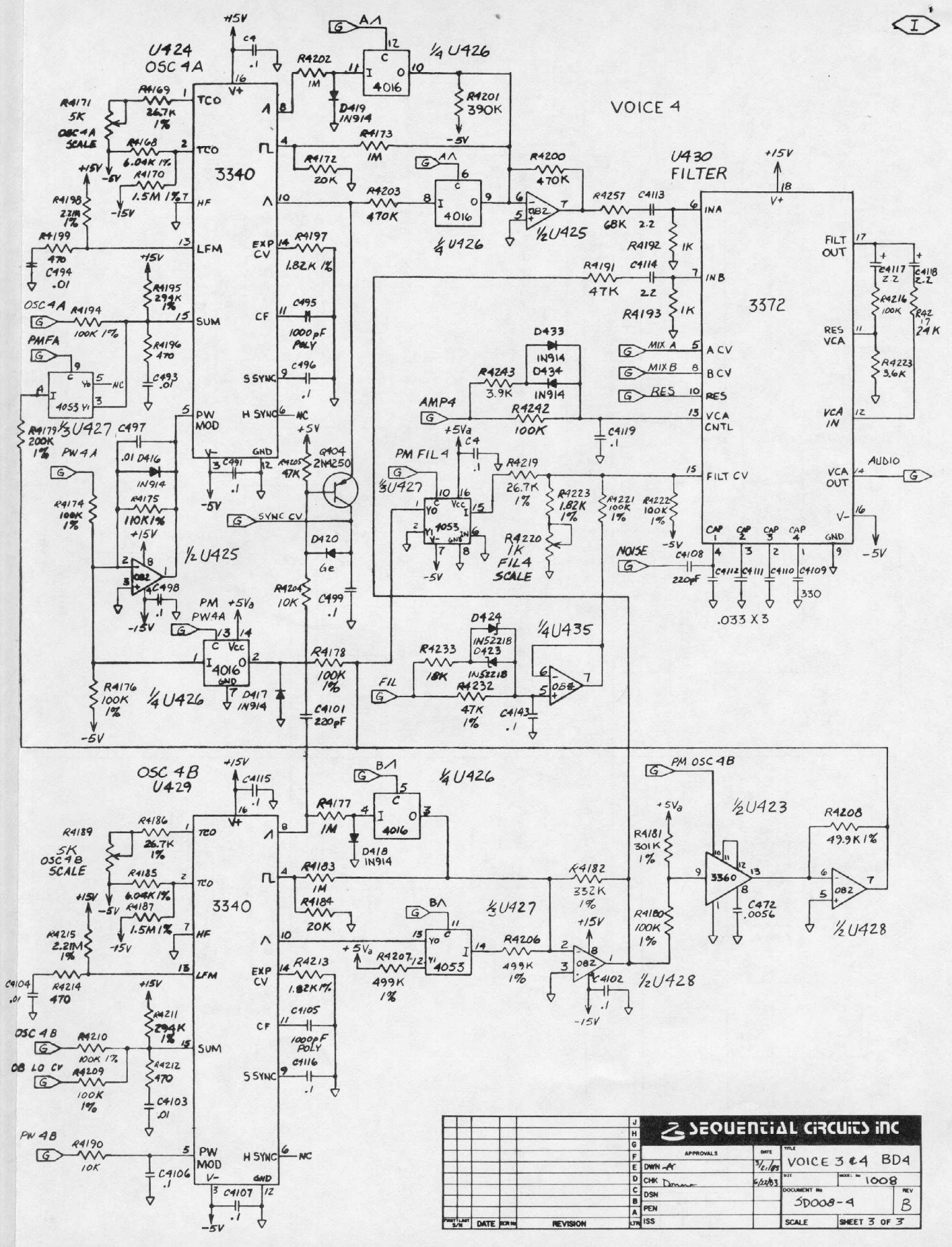
VOICE 4
U424
OSC 4A
3340
U430
FILTER
3372
OSC 4B
U429
3340
1/4 U426
1/2 U425
1/3 U427
1/4 U435
1/2 U423
1/2 U428
4016
4053
082
3360
+15V
-15V
+5V
-5V
+5Va
OSC 4A SCALE
OSC 4B SCALE
PMFA
PW4A
PW4B
PM FIL4
PM OSC4B
PM +5Va
PW4A
AMP4
FIL
SYNC CV
NOISE
AUDIO
OSC 4B LO CV
R4169 26.7K 1%
R4171 5K
R4168 6.04K 1%
R4170 1.5M 1%
R4198 2.21M 1%
R4199 470
C494 .01
R4195 294K 1%
R4194 100K 1%
R4196 470
C493 .01
R4179 200K 1%
C497 .01
D416 IN914
R4174 100K 1%
R4175 110K 1%
C498 .1
R4176 100K 1%
D417 IN914
R4202 1M
D419 IN914
R4201 390K
R4173 1M
R4172 20K
R4203 470K
R4200 470K
R4257 68K
C4113 2.2
R4192 1K
R4191 47K
C4114 2.2
R4193 1K
R4197 1.82K 1%
C495 1000pF POLY
C496 .1
C491 .1
R4205 47K
Q404 2N4250
D420 Ge
R4204 10K
C499 .1
R4178 100K 1%
C4101 220pF
D424 IN5221B
D423 IN5221B
R4233 18K
R4232 47K 1%
C4143 .1
R4219 26.7K 1%
R4223 1.82K 1%
R4221 100K 1%
R4222 100K 1%
R4220 1K FIL4 SCALE
C4119 .1
R4242 100K
R4243 3.9K
D433 IN914
D434 IN914
C4108 220pF
C4112 .033 X3
C4111 .033 X3
C4110 .033 X3
C4109 330
R4208 49.9K 1%
C472 .0056
R4181 301K 1%
R4180 100K 1%
R4182 332K 1%
R4206 499K 1%
R4207 499K 1%
C4102 .1
R4215 2.21M 1%
R4214 470
C4104 .01
R4211 294K 1%
R4210 100K 1%
R4209 100K 1%
R4212 470
C4103 .01
R4213 1.82K 1%
C4105 1000pF POLY
C4116 .1
R4190 10K
C4106 .1
C4107 .1
R4189 5K
R4186 26.7K 1%
R4185 6.04K 1%
R4187 1.5M 1%
R4183 1M
R4184 20K
R4177 1M
D418 IN914
C4115 .1
FILT OUT
RES VCA
VCA IN
VCA OUT
A CV
B CV
RES
VCA CNTL
FILT CV
INA
INB
MIX A
MIX B
RES
CAP 1
CAP 2
CAP 3
CAP 4
C4117 2.2
C4118 2.2
R4216 100K
R4217 24K
R4223 3.6K
C4 .1
C4491 .1
C4492 .1
C4493 .1
C4494 .01
C4496 .1
C4498 .1
C4499 .1
C4101 220pF
C4115 .1
C4116 .1
C4119 .1
C4143 .1
C4102 .1
C4103 .01
C4104 .01
C4105 1000pF POLY
C4106 .1
C4107 .1
C4108 220pF
C4112 .033 X3
C4111 .033 X3
C4110 .033 X3
C4109 330
C4472 .0056

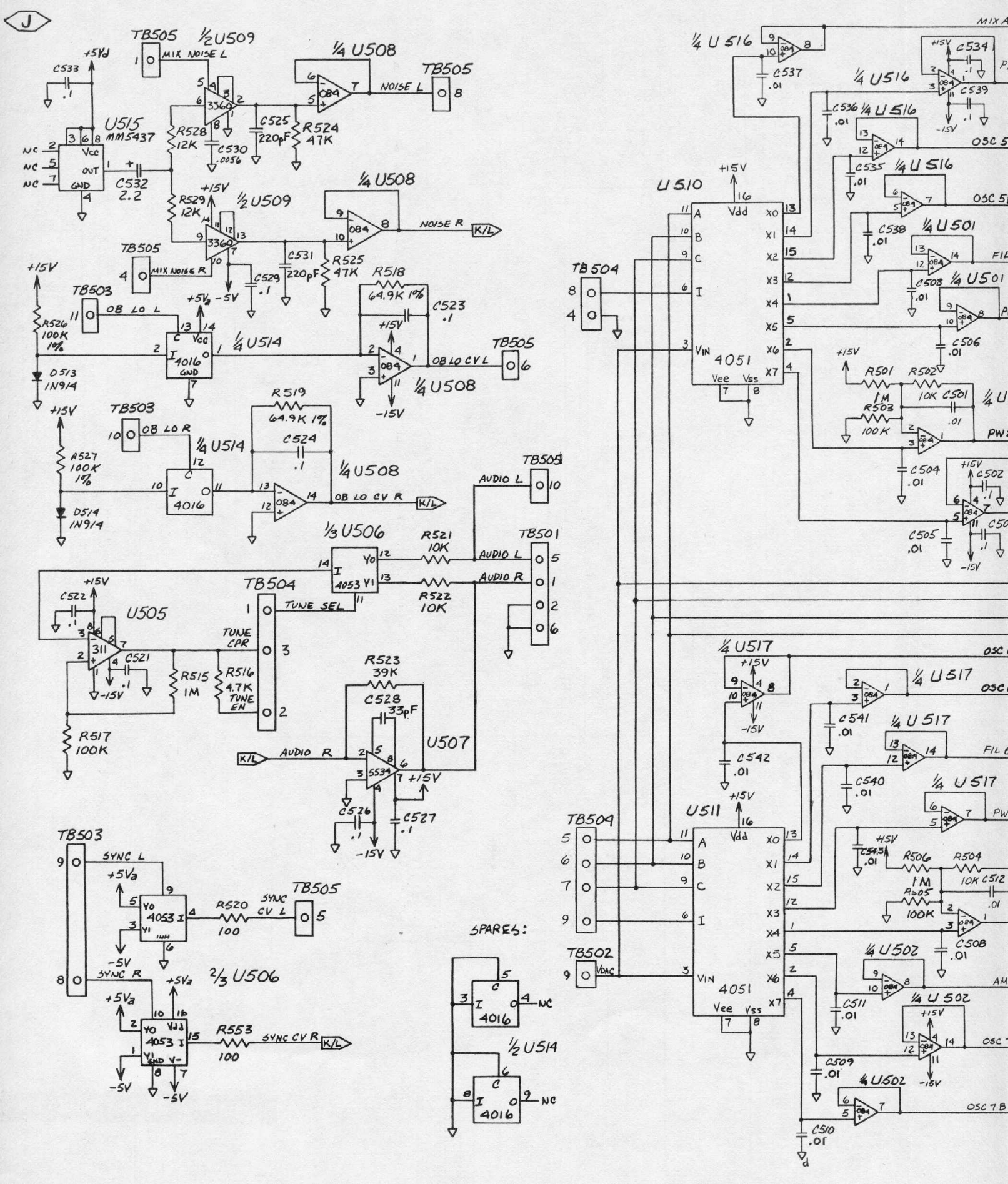
J
TB505
½ U509
MIX NOISE L
¼ U508
NOISE L
TB505
U515
MM5437
C533
.1
+5Vd
NC
NC
NC
Vcc
OUT
GND
C532
2.2
R528
12K
C530
.0056
C525
220pF
R524
47K
R529
12K
+15V
½ U509
¼ U508
NOISE R
K/L
TB505
MIX NOISE R
C531
220pF
R525
47K
C529
.1
-5V
+15V
TB503
OB LO L
R526
100K
1%
D513
1N914
+5Va
¼ U514
4016
GND
R518
64.9K 1%
C523
.1
+15V
OB LO CV L
TB505
¼ U508
-15V
TB503
OB LO R
R527
100K
1%
D514
1N914
R519
64.9K 1%
C524
.1
¼ U514
4016
¼ U508
OB LO CV R
K/L
TB505
AUDIO L
⅓ U506
4053
R521
10K
R522
10K
TB501
AUDIO L
AUDIO R
TB504
TUNE SEL
TUNE CPR
TUNE EN
C522
.1
U505
311
C521
.1
-15V
R515
1M
R516
4.7K
R517
100K
R523
39K
C528
33pF
U507
5534
AUDIO R
K/L
C526
.1
C527
.1
-15V
TB503
SYNC L
+5Va
4053
R520
100
SYNC CV L
TB505
-5V
SYNC R
+5Va
⅔ U506
4053
R553
100
SYNC CV R
K/L
-5V
-5V
SPARES:
4016
NC
½ U514
4016
NC
¼ U516
C537
.01
¼ U516
C534
C539
C536
.01
¼ U516
OSC 5
C535
.01
¼ U516
OSC 5
U510
+15V
Vdd
4051
Vee
Vss
TB504
C538
.01
¼ U501
FIL
C508
.01
¼ U501
C506
.01
+15V
R501
1M
R502
10K
C501
.01
R503
100K
PW
C504
.01
C502
.1
C505
.01
-15V
¼ U517
OSC
¼ U517
OSC
C541
.01
¼ U517
FIL
C542
.01
C540
.01
¼ U517
PW
U511
+15V
Vdd
4051
Vee
Vss
TB504
TB502
VDAC
C543
.01
R506
1M
R504
10K
C512
.01
R505
100K
C508
.01
¼ U502
AM
C511
.01
¼ U502
OSC
C509
.01
¼ U502
OSC 7 B
C510
.01
d

MIX AR
PM OSC BR
OSC 5A
OSC 5B
FIL 5
PW 5A
¼ U501
PW 5B
AMP 5
VDAC
S/H C
S/H B
S/H A
OSC 6A
OSC 6B
FIL 6
PW 6A
¼ U502
PW 6B
AMP 6
OSC 7A
OSC 7B
¼ U518
FIL 7
PW 7A
PW 7B
AMP 7
OSC 8A
OSC 8B
FIL 8
PW 8A
¼ U519
PW 8B
AMP 8
U512
U513
4051
TB504
TB501
TB502
TB503
TB505
+15V
-15V
-5V
+5Va
PM PW A R
A Λ R
B Λ R
A Λ R
B Λ R
PM FIL R
PM F A R
MIX B R
RES R
LAST USED:
D538
R5268
C5174

| | | |

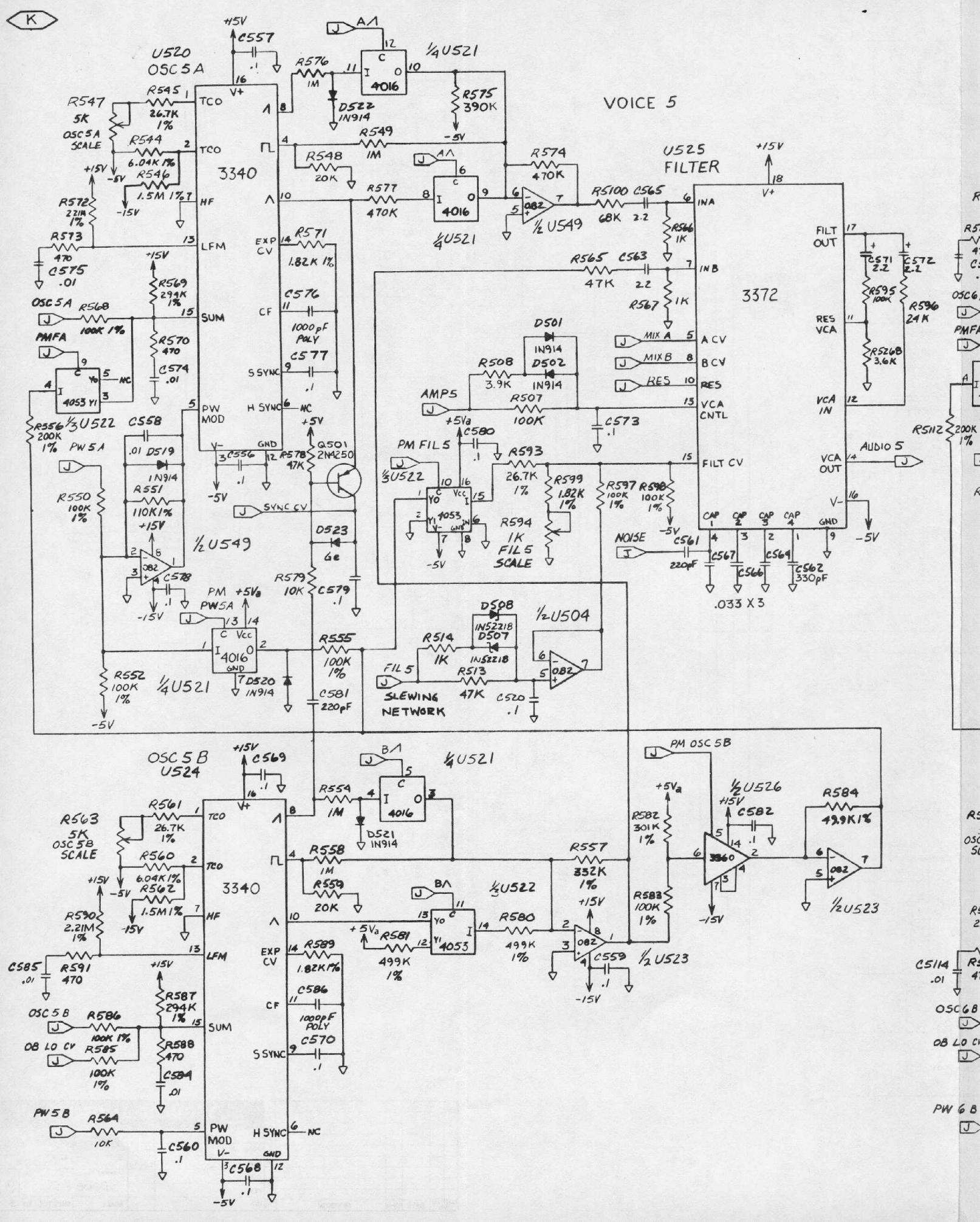
VOICE 5
U520
OSC 5A
3340
U525
FILTER
3372
OSC 5B
U524
3340
OSC5A SCALE
OSC 5B SCALE
PMFA
PM FIL 5
PM PW5A
PM OSC 5B
AMPS
NOISE
SYNC CV
AUDIO 5
FIL 5 SLEWING NETWORK
FIL 5 SCALE
.033 X 3
1/4U521
1/2U549
1/3U522
1/2U504
1/2U526
1/2U523
1/3U522
1/4U521
1/2U549
1/4U521
1/2U523
1/2U523
+15V
-15V
+5Va
-5V
TCO
HF
LFM
EXP CV
CF
SUM
S SYNC
PW MOD
H SYNC
V+
V-
GND
NC
INA
INB
A CV
B CV
RES
VCA CNTL
FILT CV
FILT OUT
RES VCA
VCA IN
VCA OUT
CAP 1
CAP 2
CAP 3
CAP 4
MIX A
MIX B
R547 5K
R545 26.7K 1%
R544 6.04K 1%
R546 1.5M 1%
R572 221K 1%
R573 470
C575 .01
R569 294K 1%
R568 100K 1%
R570 470
C574 .01
R556 200K 1%
R550 100K 1%
R551 110K 1%
C558 .01
D519 1N914
C556 .1
R578 47K
Q501 2N4250
D523 6e
R579 10K
C579 .1
C578 .1
R552 100K 1%
R576 1M
D522 1N914
R575 390K
R549 1M
R548 20K
R574 470K
R577 470K
R571 1.82K 1%
C576 1000pF POLY
C577 .1
R508 3.9K
D501 IN914
D502 IN914
R507 100K
C580 .1
R593 26.7K 1%
R599 1.82K 1%
R597 100K 1%
R598 100K 1%
R594 1K
C573 .1
C561 220pF
C567
C566
C569
C562 330pF
R5100 68K
C565 2.2
R566 1K
R565 47K
C563 2.2
R567 1K
R595 100K
R596 24K
R568 3.6K
C571 2.2
C572 2.2
R5112 200K 1%
D508 IN5221B
D507 IN5221B
R514 1K
R513 47K
C520 .1
C581 220pF
R555 100K 1%
D520 IN914
R569 C569 .1
R561 26.7K 1%
R560 6.04K 1%
R562 1.5M 1%
R563 5K
R590 2.21M 1%
R591 470
C585 .01
R587 294K 1%
R586 100K 1%
R585 100K 1%
R588 470
C584 .01
R564 10K
C560 .1
C568 .1
R554 1M
D521 IN914
R558 1M
R559 20K
R589 1.82K 1%
C586 1000pF POLY
C570 .1
R581 499K 1%
R580 499K 1%
C559 .1
R557 332K 1%
R582 301K 1%
R583 100K 1%
R584 49.9K 1%
C582 .1
C5114 .01
OSC 5A
OSC 5B
OSC 6A
OSC 6B
PMFA
PW 5A
PW 5B
PW 6 B
OB LO CV
SYNC CV
MIX A
MIX B
RES
AMPS
NOISE
AUDIO 5
PM FIL 5
PM PW5A
PM OSC 5B
FIL 5 SLEWING NETWORK
FIL 5 SCALE
.033 X 3

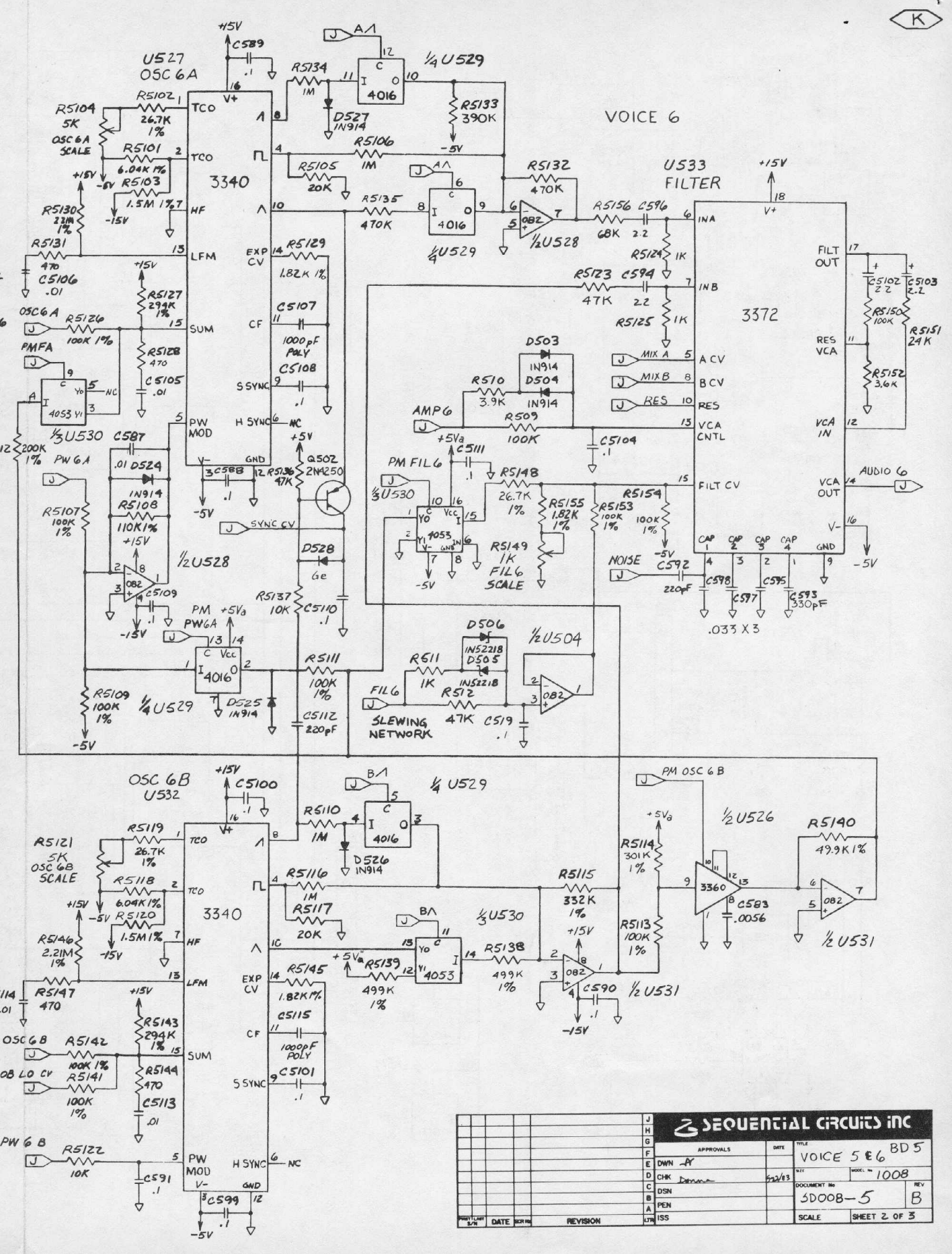
K
VOICE 6
U527
OSC 6A
3340
U533
FILTER
3372
OSC 6B
U532
3340
1/4 U529
1/2 U528
1/3 U530
1/2 U504
1/2 U526
1/2 U531
1/3 U530
1/4 U529
1/2 U531
1/2 U528
1/4 U529
1/2 U531
R5104
5K
OSC 6A
SCALE
R5102
26.7K
1%
R5101
6.04K 1%
R5103
1.5M 1%
R5130
2.21M
1%
R5131
470
C5106
.01
R5127
294K
1%
R5126
100K 1%
R5128
470
C5105
.01
R5134
1M
D527
IN914
R5133
390K
R5106
1M
R5105
20K
R5135
470K
R5132
470K
R5156
68K
C596
2.2
R5124
1K
R5123
47K
C594
2.2
R5125
1K
R5129
1.82K 1%
C5107
1000pF
POLY
C5108
.1
C5588
.1
R5136
47K
Q502
2N4250
D528
Ge
R5137
10K
C5110
.1
C587
.01
D524
IN914
R5108
110K 1%
R5107
100K
1%
C5109
.1
R5109
100K
1%
R5111
100K
1%
C5112
220pF
D525
IN914
D503
IN914
D504
IN914
R510
3.9K
R509
100K
C5104
.1
C5111
.1
R5148
26.7K
1%
R5155
1.82K
1%
R5153
100K
1%
R5154
100K
1%
R5149
1K
FIL6
SCALE
D506
IN52218
D505
IN52218
R511
1K
R512
47K
C519
.1
FIL6
SLEWING
NETWORK
R5121
5K
OSC 6B
SCALE
R5119
26.7K
1%
R5118
6.04K 1%
R5120
1.5M 1%
R5146
2.21M
1%
R5147
470
R5143
294K
1%
R5142
100K 1%
R5141
100K
1%
R5144
470
C5113
.01
R5122
10K
C591
.1
C5100
.1
R5110
1M
D526
IN914
R5116
1M
R5117
20K
R5145
1.82K 1%
C5115
1000pF
POLY
C5101
.1
R5139
499K
1%
R5138
499K
1%
R5115
332K
1%
C590
.1
R5114
301K
1%
R5113
100K
1%
C583
.0056
R5140
49.9K 1%
C5102
2.2
C5103
2.2
R5150
100K
R5151
24K
R5152
3.6K
C592
220pF
C598
C597
C595
C593
330pF
.033 X 3
AMP6
PM FIL6
PM OSC 6B
PM PW6A
PW 6A
PW 6B
OSC 6A
PMFA
OSC 6B
OB LO CV
MIX A
MIX B
RES
NOISE
AUDIO 6
SYNC CV
+15V
-15V
-5V
+5V
+5Va
SEQUENTIAL CIRCUITS INC
APPROVALS
DATE
DWN
CHK
DSN
PEN
ISS
TITLE
VOICE 5 & 6
BD5
SIZE
MODEL No
1008
DOCUMENT No
SD008-5
REV
B
SCALE
SHEET 2 OF 3
REVISION
DATE

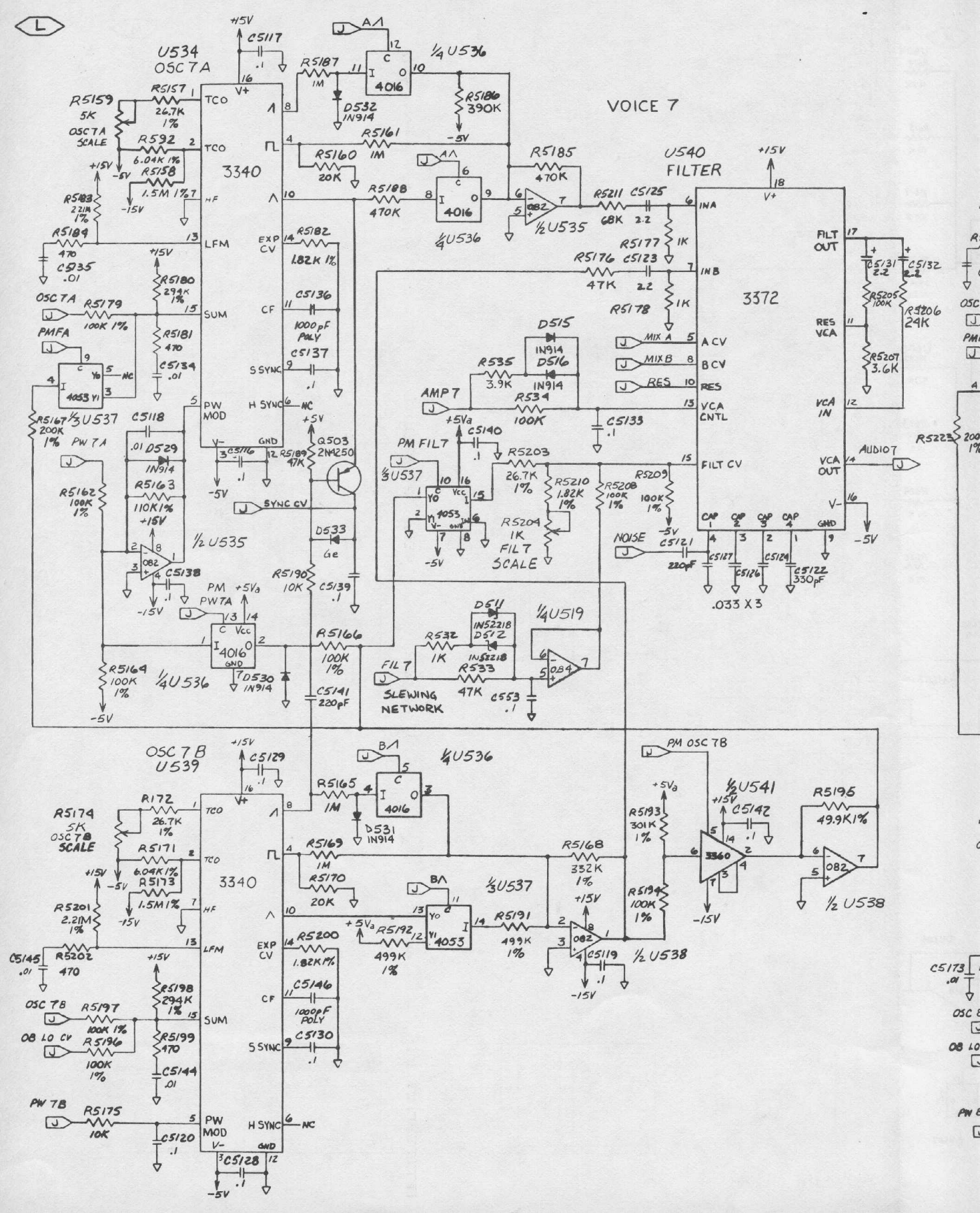
L
VOICE 7
U534
OSC 7A
3340
U540
FILTER
3372
OSC 7B
U539
3340
1/4 U536
1/2 U535
1/3 U537
1/4 U519
1/2 U541
1/2 U538
1/3 U537
1/2 U538
R5159
5K
OSC 7A
SCALE
R5157
26.7K
1%
R592
6.04K 1%
R5158
1.5M 1%
R5183
2.21M
1%
R5184
470
C5135
.01
R5187
1M
D532
1N914
R5186
390K
R5161
1M
R5160
20K
R5188
470K
R5185
470K
R5211
68K
C5125
2.2
R5177
1K
R5176
47K
C5123
2.2
R5178
1K
R5182
1.82K 1%
C5136
1000pF
POLY
C5137
.1
R5180
294K
1%
R5179
100K 1%
R5181
470
C5134
.01
OSC 7A
PMFA
R5167
200K
1%
PW 7A
C5118
.01
D529
1N914
R5163
110K 1%
R5162
100K
1%
C5116
.1
R5189
47K
Q503
2N4250
SYNC CV
D533
Ge
R5190
10K
C5139
.1
C5138
.1
PM
PW 7A
R5164
100K
1%
D530
1N914
R5166
100K
1%
C5141
220pF
D515
1N914
D516
1N914
R535
3.9K
R534
100K
AMP 7
C5133
.1
C5140
.1
PM FIL 7
R5203
26.7K
1%
R5210
1.82K
1%
R5208
100K
1%
R5209
100K
1%
R5204
1K
FIL 7
SCALE
NOISE
C5121
220pF
C5127
C5126
C5124
C5122
330pF
.033 X 3
AUDIO 7
C5131
2.2
C5132
2.2
R5205
100K
R5206
24K
R5207
3.6K
D511
1N52218
D512
1N52218
R532
1K
R533
47K
C553
.1
FIL 7
SLEWING
NETWORK
C5129
.1
R5165
1M
D531
1N914
R5174
5K
OSC 7B
SCALE
R172
26.7K
1%
R5171
6.04K 1%
R5173
1.5M 1%
R5201
2.21M
1%
R5202
470
C5145
.01
R5169
1M
R5170
20K
R5200
1.82K 1%
C5146
1000pF
POLY
C5130
.1
R5198
294K
1%
R5197
100K 1%
R5196
100K
1%
R5199
470
C5144
.01
OSC 7B
OB LO CV
PW 7B
R5175
10K
C5120
.1
C5128
.1
R5192
499K
1%
R5191
499K
1%
R5168
332K
1%
C5119
.1
PM OSC 7B
R5193
301K
1%
R5194
100K
1%
C5142
.1
R5195
49.9K 1%
C5173
.01
OSC 8
OB LO
PW 8
+15V
-5V
-15V
+5V
+5Va
MIX A
MIX B
RES
INA
INB
A CV
B CV
RES
VCA
CNTL
FILT CV
FILT
OUT
RES
VCA
VCA
IN
VCA
OUT
V+
V-
GND
CAP 1
CAP 2
CAP 3
CAP 4
TCO
HF
LFM
SUM
PW
MOD
EXP
CV
CF
S SYNC
H SYNC
NC
4016
4053
082
084
3360

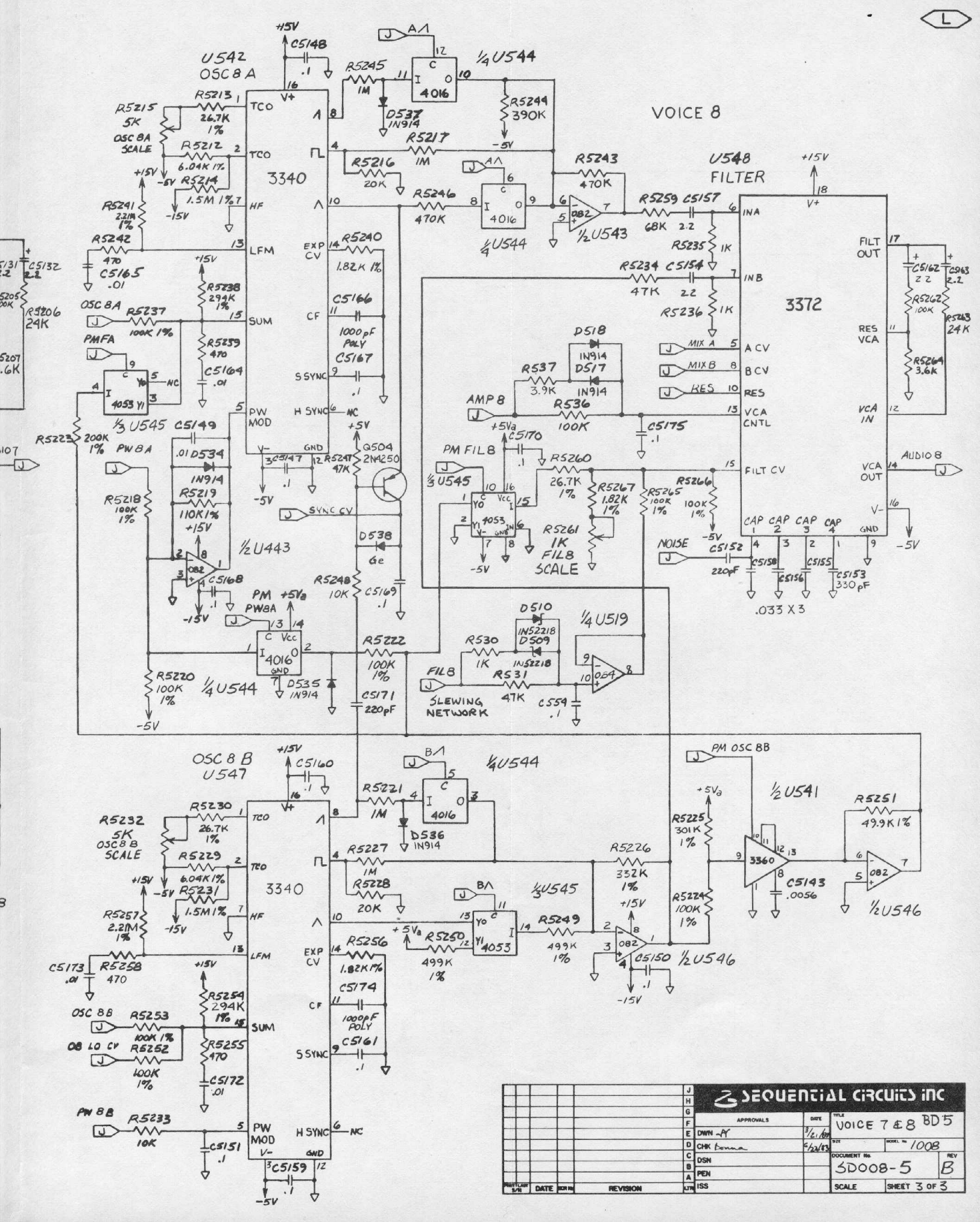

SEQUENTIAL CIRCUITS INC

APPROVALS	DATE	TITLE
DWN AY	3/21/83	VOICE 7 & 8 BD5
CHK Donna	6/22/83	SIZE / MODEL No. 1008
DSN		DOCUMENT No. SD008-5 / REV B
PEN		
ISS		SCALE / SHEET 3 OF 3

REVISION

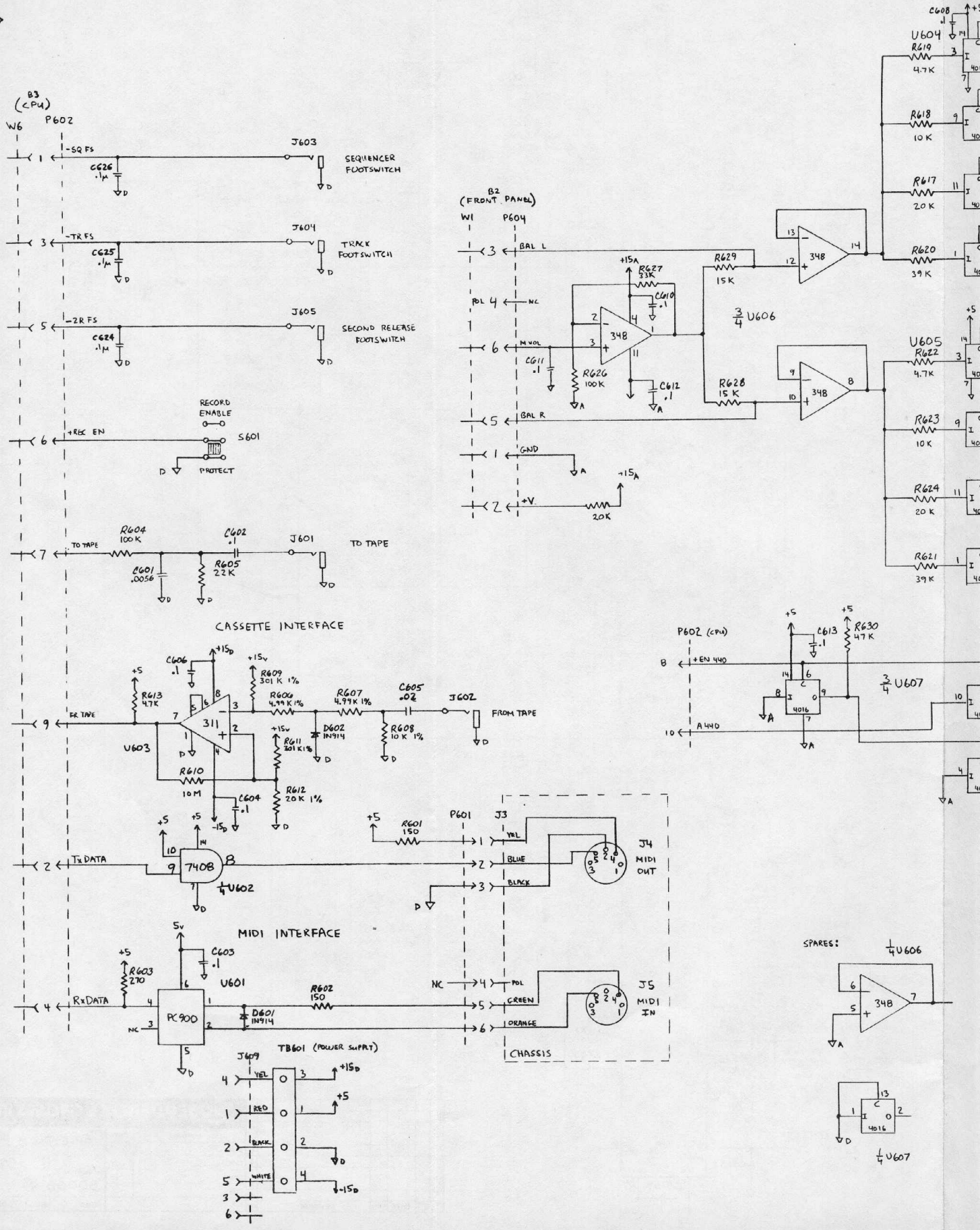
B3 (CPU)
P602
W6
-SQ FS
J603
SEQUENCER FOOTSWITCH
C626 .1μ
-TR FS
J604
TRACK FOOTSWITCH
C625 .1μ
-2R FS
J605
SECOND RELEASE FOOTSWITCH
C624 .1μ
RECORD ENABLE
+REC EN
S601
PROTECT
TO TAPE
R604 100K
C602 .1
J601
TO TAPE
C601 .0056
R605 22K
CASSETTE INTERFACE
FR TAPE
R613 4.7K
C606 .1
+15D
+15V
R609 301K 1%
R606 4.99K 1%
R607 4.99K 1%
C605 .02
J602
FROM TAPE
U603
311
D602 IN914
R608 10K 1%
R611 301K 1%
R610 10M
C604 .1
R612 20K 1%
-15D
Tx DATA
7408
¼U602
R601 150
P601
J3
YEL
BLUE
BLACK
J4 MIDI OUT
MIDI INTERFACE
5V
C603 .1
U601
R603 270
RxDATA
PC900
NC
R602 150
D601 IN914
POL
GREEN
ORANGE
J5 MIDI IN
CHASSIS
TB601 (POWER SUPPLY)
J609
YEL
RED
BLACK
WHITE
B2 (FRONT PANEL)
W1
P604
BAL L
POL
NC
M VOL
BAL R
GND
+V
20K
R627 33K
C610 .1
R626 100K
C611 .1
C612 .1
R629 15K
R628 15K
¾U606
U604
R619 4.7K
R618 10K
R617 20K
R620 39K
U605
R622 4.7K
R623 10K
R624 20K
R621 39K
P602 (CPU)
+EN 440
A 440
C613 .1
R630 47K
¾U607
4016
SPARES:
¼U606
348
¼U607

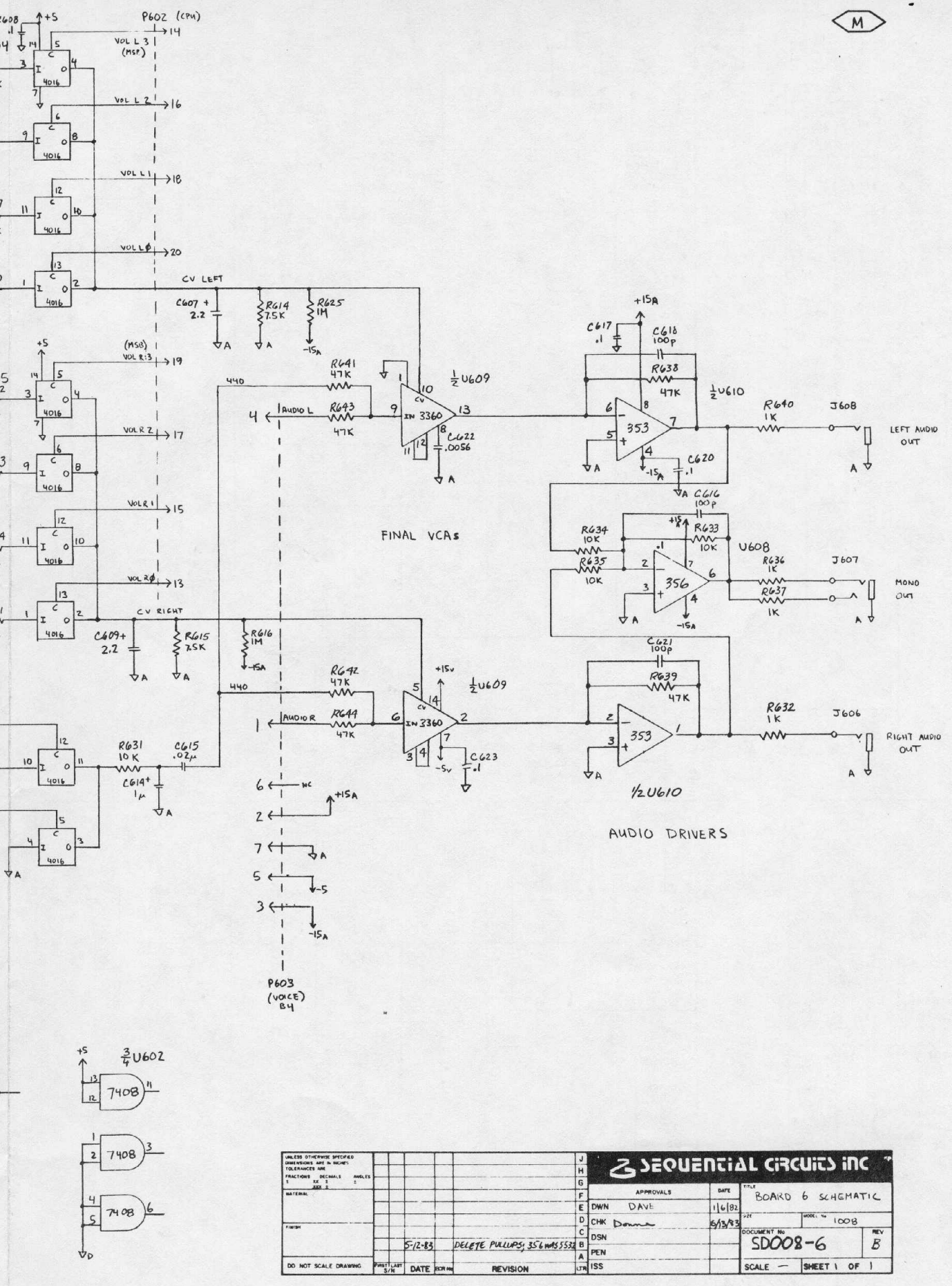
M
P602 (CPU)
VOL L 3 (MSB)
VOL L 2
VOL L 1
VOL L Ø
CV LEFT
C607 + 2.2
R614 7.5K
R625 1M
(MSB) VOL R 3
VOL R 2
VOL R 1
VOL R Ø
CV RIGHT
C609 + 2.2
R615 7.5K
R616 1M
R641 47K
R643 47K
AUDIO L
½U609
IN 3360
C622 .0056
FINAL VCAs
R642 47K
R644 47K
AUDIO R
C623 .1
R631 10K
C615 .02μ
C614 1μ
P603 (VOICE) B4
C617 .1
C618 100p
R638 47K
½U610
353
C620 .1
R640 1K
J608
LEFT AUDIO OUT
C616 100p
R634 10K
R633 10K
R635 10K
U608
356
R636 1K
R637 1K
J607
MONO OUT
C621 100p
R639 47K
R632 1K
J606
RIGHT AUDIO OUT
½U610
AUDIO DRIVERS
¾U602
7408
UNLESS OTHERWISE SPECIFIED DIMENSIONS ARE IN INCHES TOLERANCES ARE
FRACTIONS ± DECIMALS ± ANGLES ±
MATERIAL
FINISH
DO NOT SCALE DRAWING
5-12-83
DELETE PULLUPS; 356 WAS 5532
DATE
REVISION
SEQUENTIAL CIRCUITS INC
APPROVALS
DATE
DWN DAVE 1/6/82
CHK Donna 6/13/83
DSN
PEN
ISS
TITLE BOARD 6 SCHEMATIC
SIZE
MODEL No 1008
DOCUMENT No SD008-6
REV B
SCALE —
SHEET 1 OF 1

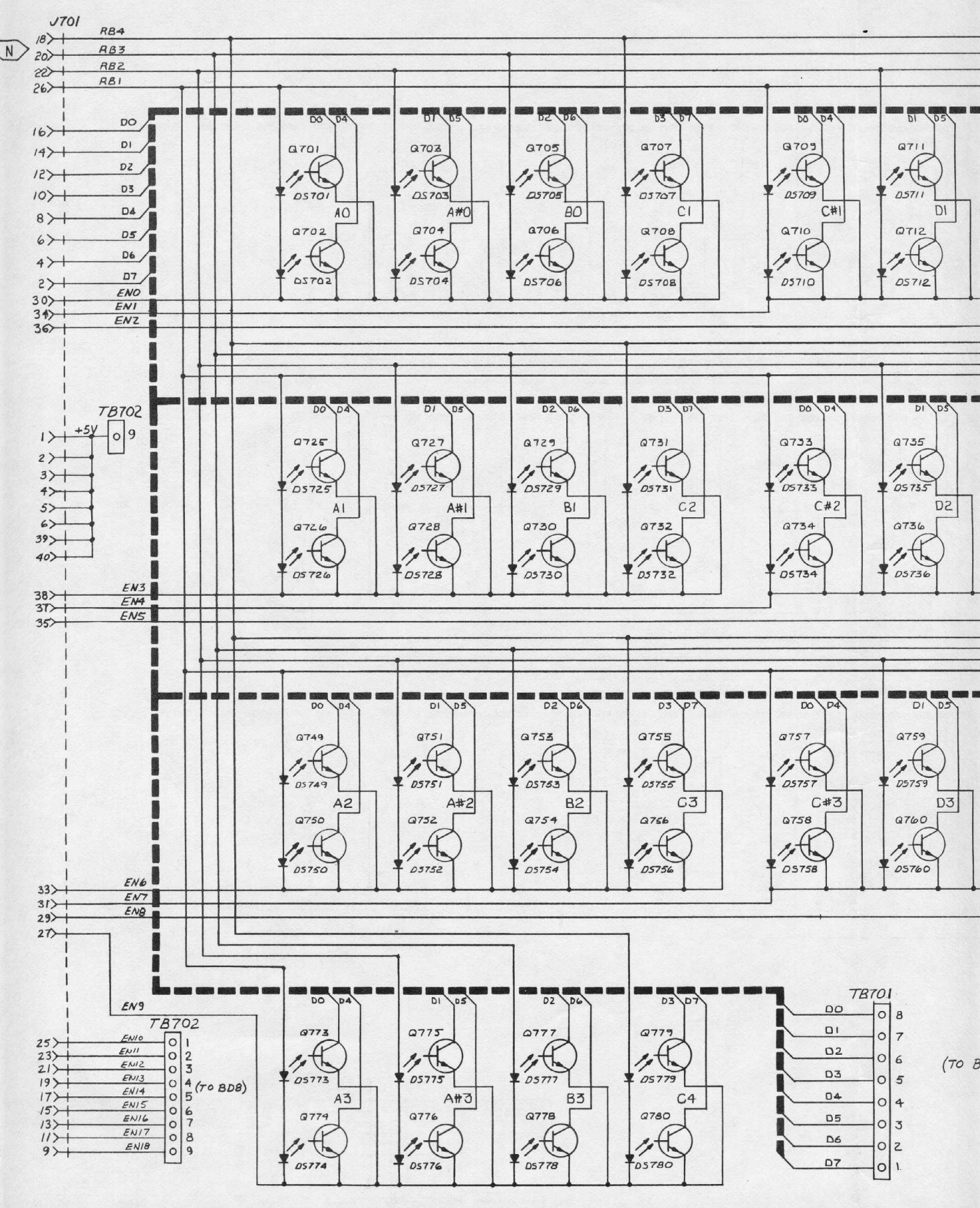
J701
N
18 RB4
20 RB3
22 RB2
26 RB1
16 D0
14 D1
12 D2
10 D3
8 D4
6 D5
4 D6
2 D7
30 EN0
34 EN1
36 EN2
Q701 DS701 A0 Q702 DS702
Q703 DS703 A#0 Q704 DS704
Q705 DS705 B0 Q706 DS706
Q707 DS707 C1 Q708 DS708
Q709 DS709 C#1 Q710 DS710
Q711 DS711 D1 Q712 DS712
TB702
+5V
1
2
3
4
5
6
39
40
9
Q725 DS725 A1 Q726 DS726
Q727 DS727 A#1 Q728 DS728
Q729 DS729 B1 Q730 DS730
Q731 DS731 C2 Q732 DS732
Q733 DS733 C#2 Q734 DS734
Q735 DS735 D2 Q736 DS736
38 EN3
37 EN4
35 EN5
Q749 DS749 A2 Q750 DS750
Q751 DS751 A#2 Q752 DS752
Q753 DS753 B2 Q754 DS754
Q755 DS755 C3 Q756 DS756
Q757 DS757 C#3 Q758 DS758
Q759 DS759 D3 Q760 DS760
33 EN6
31 EN7
29 EN8
27
EN9
TB702
25 EN10
23 EN11
21 EN12
19 EN13
17 EN14
15 EN15
13 EN16
11 EN17
9 EN18
1
2
3
4 (TO BD8)
5
6
7
8
9
Q773 DS773 A3 Q774 DS774
Q775 DS775 A#3 Q776 DS776
Q777 DS777 B3 Q778 DS778
Q779 DS779 C4 Q780 DS780
TB701
D0
D1
D2
D3
D4
D5
D6
D7
8
7
6
5
4
3
2
1
(TO B

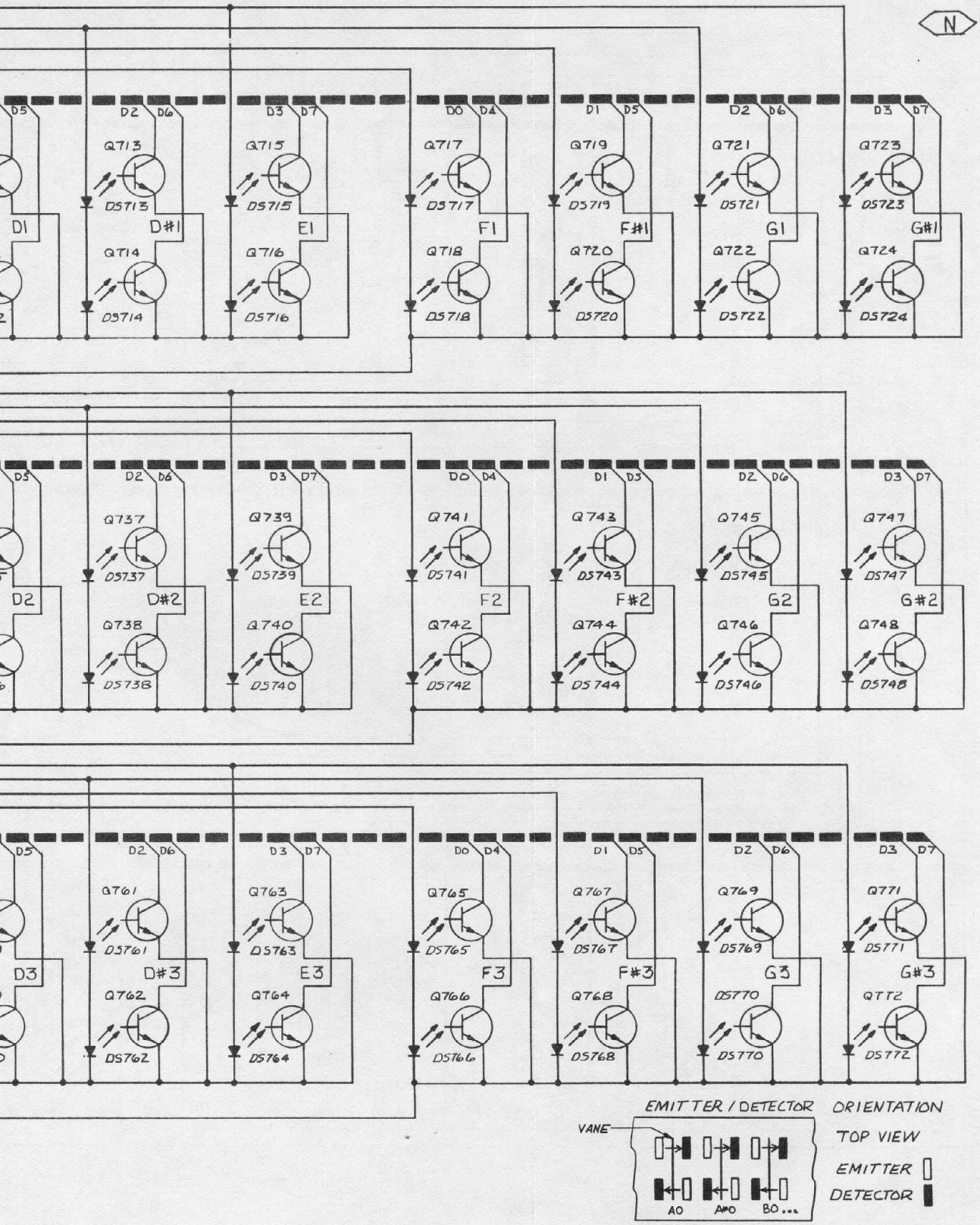

(TO BD 8)

UNLESS OTHERWISE SPECIFIED DIMENSIONS ARE IN INCHES TOLERANCES ARE FRACTIONS ± DECIMALS ± ANGLES ±					J	SEQUENTIAL CIRCUITS INC
MATERIAL					H	
					G	
					F	APPROVALS / DATE
					E	DWN AY 2-2-83
					D	CHK Donna 5/13/83
FINISH					C	DSN
		5-4-83		AD-PIN CONNECTOR PIN #3	B	PEN
DO NOT SCALE DRAWING	PRINT LAST S/N	DATE	SCR No	REVISION	A	ISS

TITLE: OPTICAL BD 7
SIZE: MODEL No. 1008
DOCUMENT No. 5D008-7 REV B
SCALE SHEET 1 OF 1

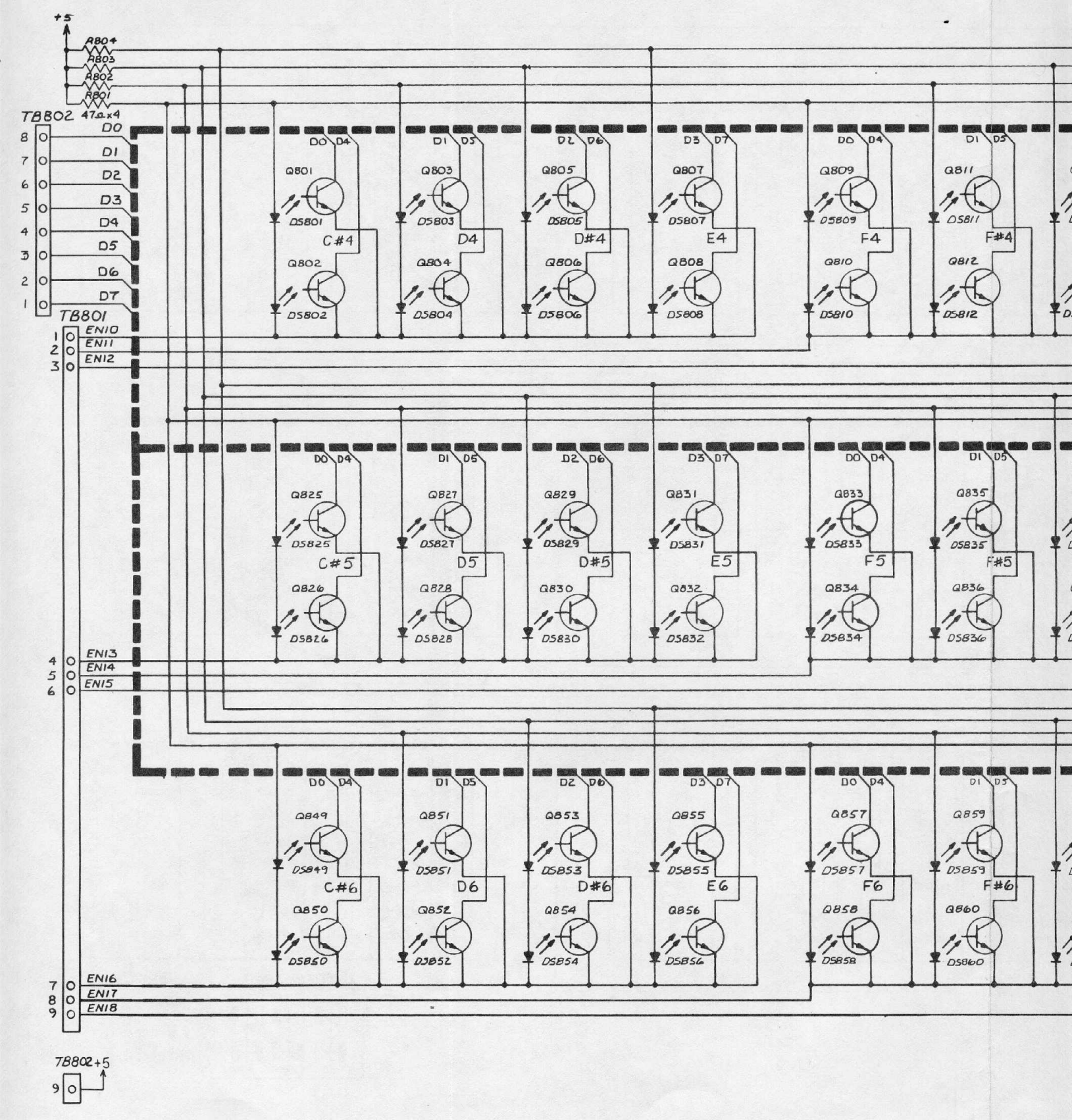
+5
R804
R803
R802
R801
TB802 47Ω x4
D0
D1
D2
D3
D4
D5
D6
D7
TB801
EN10
EN11
EN12
EN13
EN14
EN15
EN16
EN17
EN18
Q801
DS801
C#4
Q802
DS802
Q803
DS803
D4
Q804
DS804
Q805
DS805
D#4
Q806
DS806
Q807
DS807
E4
Q808
DS808
Q809
DS809
F4
Q810
DS810
Q811
DS811
F#4
Q812
DS812
Q825
DS825
C#5
Q826
DS826
Q827
DS827
D5
Q828
DS828
Q829
DS829
D#5
Q830
DS830
Q831
DS831
E5
Q832
DS832
Q833
DS833
F5
Q834
DS834
Q835
DS835
F#5
Q836
DS836
Q849
DS849
C#6
Q850
DS850
Q851
DS851
D6
Q852
DS852
Q853
DS853
D#6
Q854
DS854
Q855
DS855
E6
Q856
DS856
Q857
DS857
F6
Q858
DS858
Q859
DS859
F#6
Q860
DS860
TB802+5

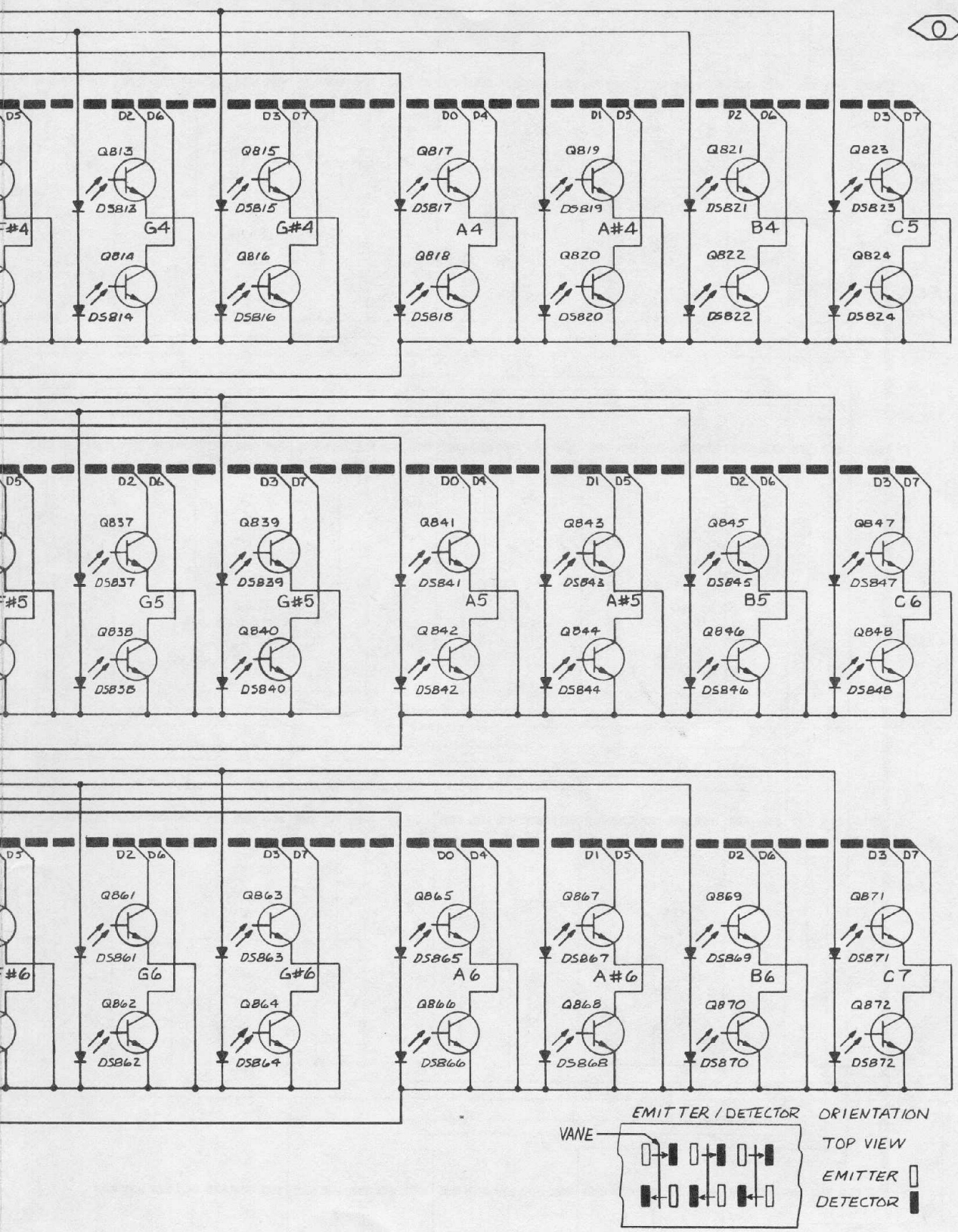

SEQUENTIAL CIRCUITS INC

APPROVALS	DATE
DWN AY	2-3-83
CHK Donna	6/3/83
DSN	
PEN	
ISS	

TITLE: OPTICAL BD8

SIZE: | MODEL No. 1008

DOCUMENT No. SD008-8 | REV A

SCALE | SHEET 1 OF 1

DO NOT SCALE DRAWING

DATE | REVISION

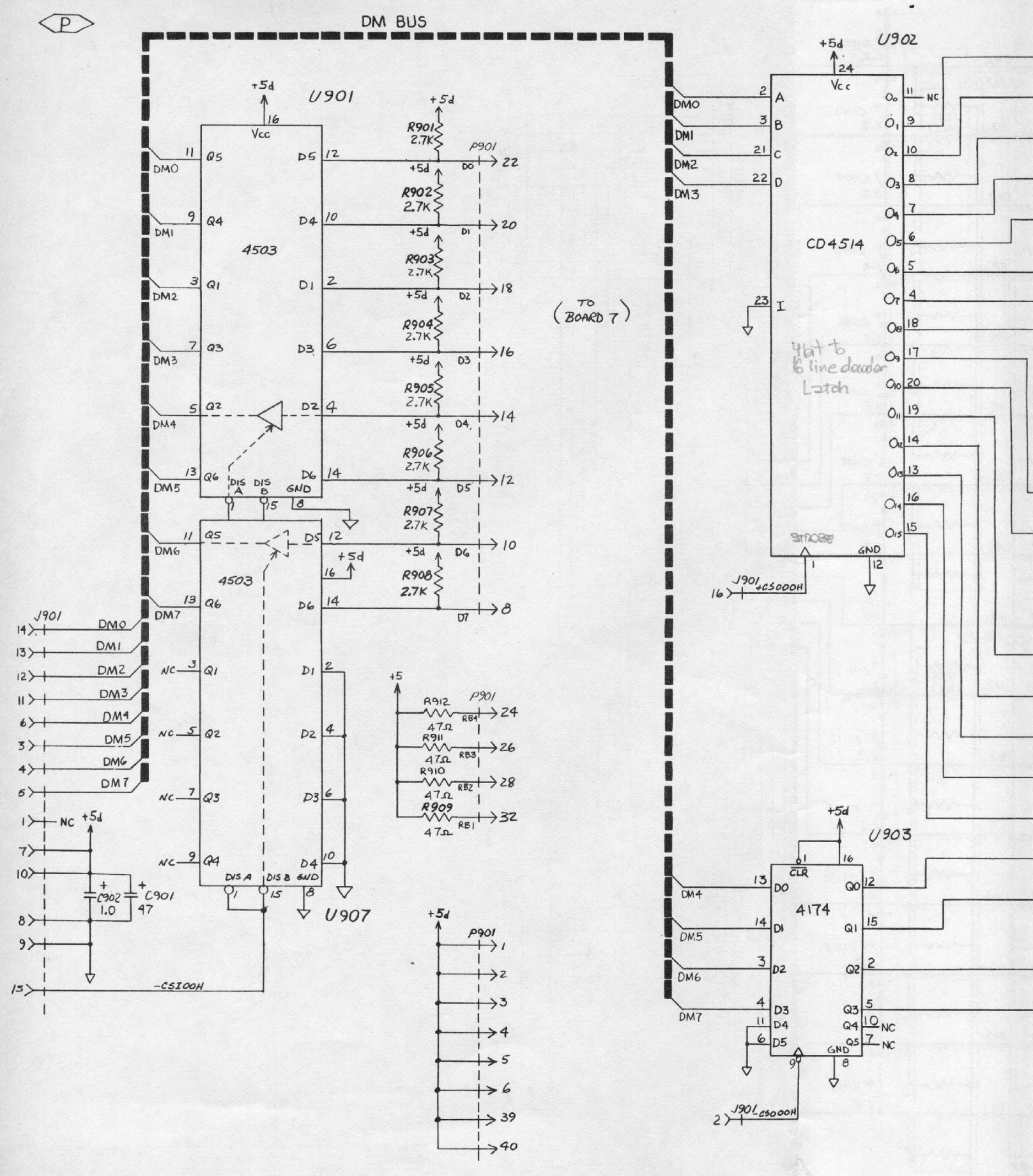
P
DM BUS
U901
4503
+5d
Vcc
DMO
DM1
DM2
DM3
DM4
DM5
DM6
DM7
DIS A
DIS B
GND
R901 2.7K
R902 2.7K
R903 2.7K
R904 2.7K
R905 2.7K
R906 2.7K
R907 2.7K
R908 2.7K
P901
D0
D1
D2
D3
D4
D5
D6
D7
(TO BOARD 7)
U902
CD4514
4 bit to 16 line decoder Latch
STROBE
J901 -CS000H
U903
4174
CLR
-CS100H
C902 1.0
C901 47
R912 47Ω
R911 47Ω
R910 47Ω
R909 47Ω
U907

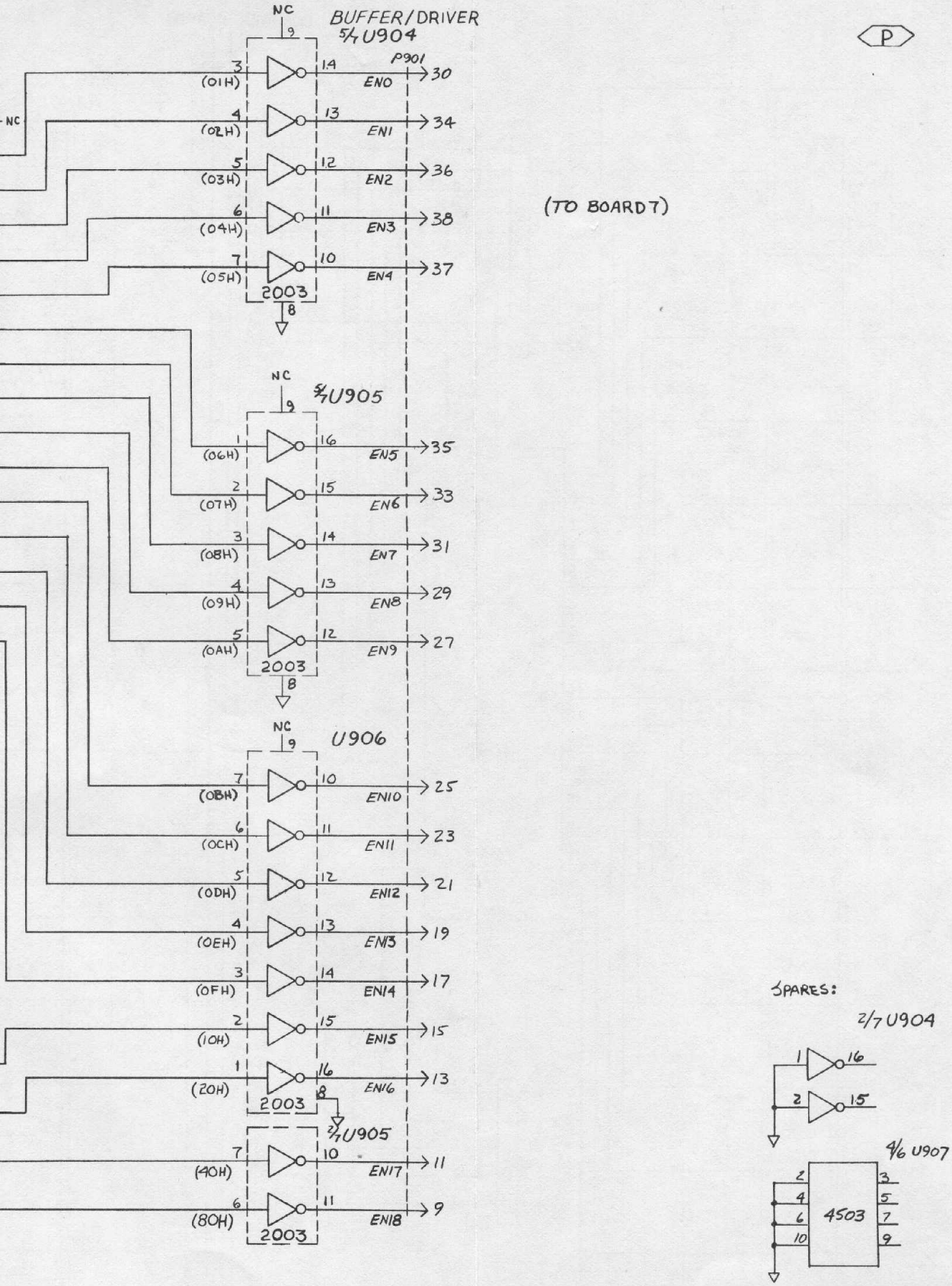

UNLESS OTHERWISE SPECIFIED DIMENSIONS ARE IN INCHES TOLERANCES ARE: FRACTIONS ± DECIMALS ± ANGLES ±					J	SEQUENTIAL CIRCUITS INC		
MATERIAL					H			
					G			
					F	APPROVALS	DATE	TITLE OPTICAL BD 9
					E	DWN AY	2/8/83	
					D	CHK Donna	5/13/83	SIZE / MODEL No 1008
FINISH					C	DSN		DOCUMENT No SD008-9 / REV B
					B	PEN		
DO NOT SCALE DRAWING	FIRST LAST S/N	DATE	ECR No	REVISION	A LTR	ISS		SCALE / SHEET 1 OF 1

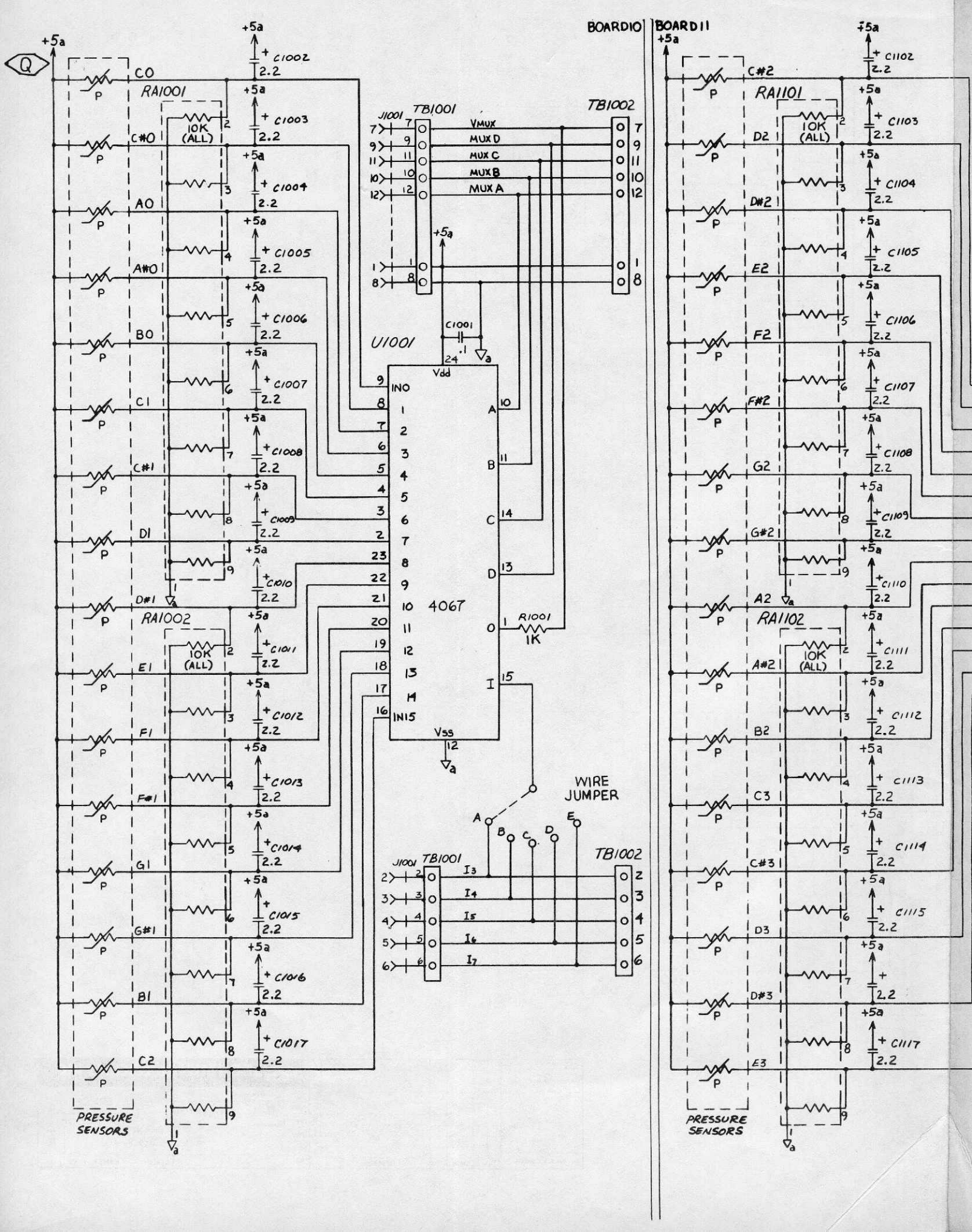
BOARD 10
BOARD 11
+5a
Q
C0
C#0
A0
A#0
B0
C1
C#1
D1
D#1
E1
F1
F#1
G1
G#1
B1
C2
RA1001
RA1002
10K (ALL)
C1002
C1003
C1004
C1005
C1006
C1007
C1008
C1009
C1010
C1011
C1012
C1013
C1014
C1015
C1016
C1017
2.2
P
PRESSURE SENSORS
J1001
TB1001
TB1002
VMUX
MUX D
MUX C
MUX B
MUX A
C1001
.1
U1001
4067
Vdd
Vss
INO
IN15
R1001
1K
WIRE JUMPER
C#2
D2
D#2
E2
F2
F#2
G2
G#2
A2
A#2
B2
C3
C#3
D3
D#3
E3
RA1101
RA1102
C1102
C1103
C1104
C1105
C1106
C1107
C1108
C1109
C1110
C1111
C1112
C1113
C1114
C1115
C1117

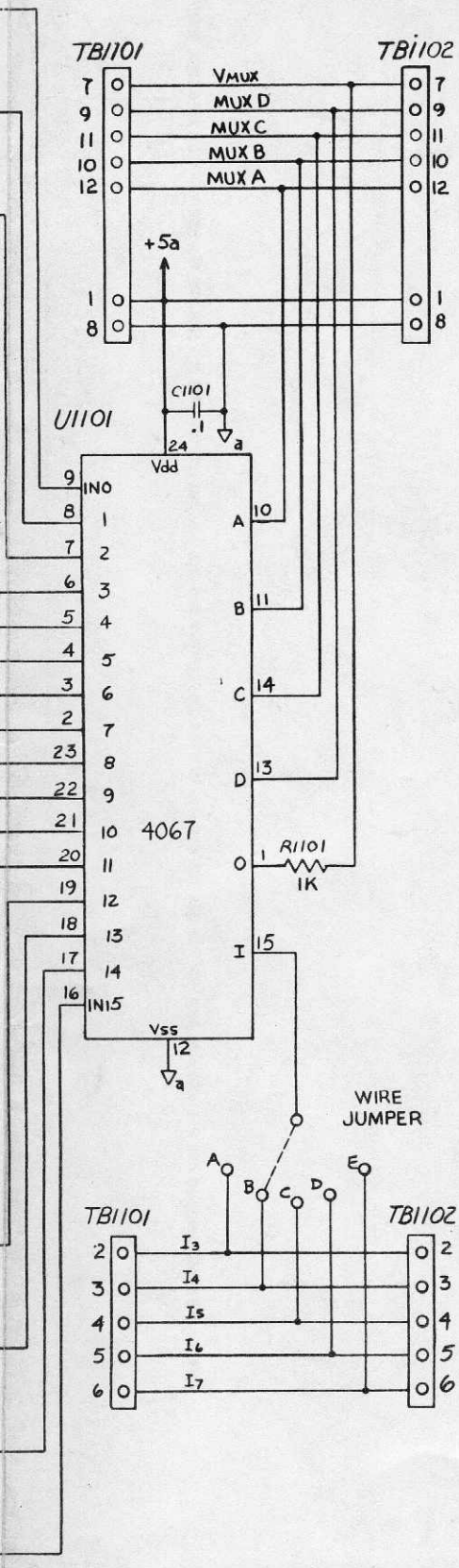

SEQUENTIAL CIRCUITS INC

DWN	A	2/19/83	PRESSURE BOARDS
CHK	Donna	6/13/83	1008
DSN			SD008-10/11 — REV B
PEN			
MS			SCALE — SHEET 1 OF 1

	5-4-83		CHANGED JMPR DESIGNATION
	DATE		REVISION

DO NOT SCALE DRAWING

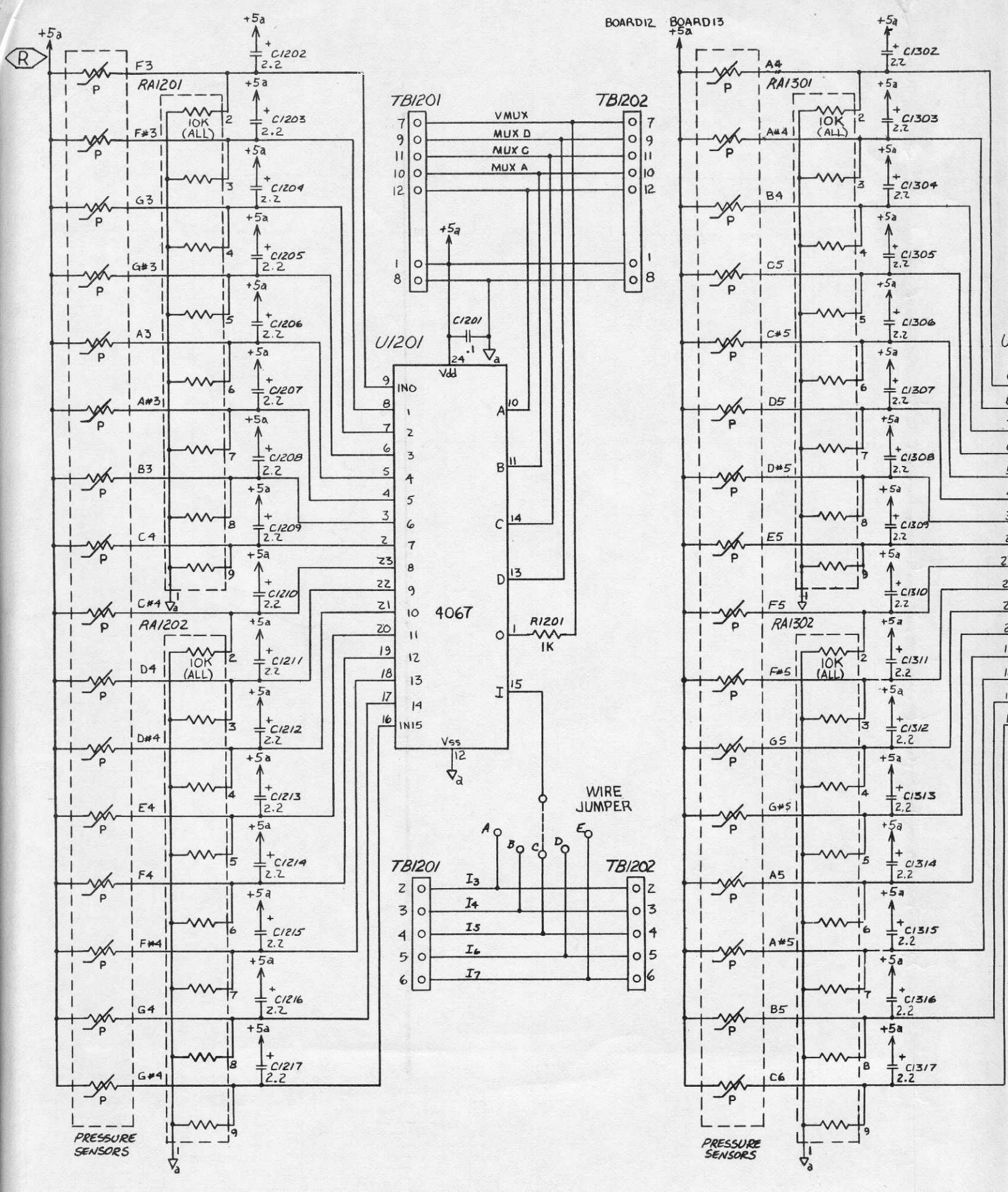

BOARD12
BOARD13
+5a
R
F3
RA1201
F#3
G3
G#3
A3
A#3
B3
C4
C#4
RA1202
D4
D#4
E4
F4
F#4
G4
G#4
10K (ALL)
C1202
C1203
C1204
C1205
C1206
C1207
C1208
C1209
C1210
C1211
C1212
C1213
C1214
C1215
C1216
C1217
2.2
PRESSURE SENSORS
TB1201
TB1202
VMUX
MUX D
MUX C
MUX A
C1201
.1
U1201
4067
Vdd
Vss
IN0
IN15
R1201
1K
WIRE JUMPER
I3
I4
I5
I6
I7
A4
RA1301
A#4
B4
C5
C#5
D5
D#5
E5
F5
RA1302
F#5
G5
G#5
A5
A#5
B5
C6
C1302
C1303
C1304
C1305
C1306
C1307
C1308
C1309
C1310
C1311
C1312
C1313
C1314
C1315
C1316
C1317

BOARD 13
BOARD 14
+5a
TB1301
TB1302
VMUX
MUX D
MUX C
MUX B
MUX A
U1301
4067
C1301
.1
Vdd
Vss
R1301
1K
WIRE JUMPER
RA1401
10K (ALL)
C#6
D6
D#6
E6
F6
F#6
G6
G#6
A6
RA1402
A#6
B6
C7
C1402
C1403
C1404
C1405
C1406
C1407
C1408
C1409
C1410
C1411
C1412
C1413
2.2
PRESSURE SENSORS
SPARES:
RA1402
TB1401
U1401
4067
C1401
R1401
1K
WIRE JUMPER

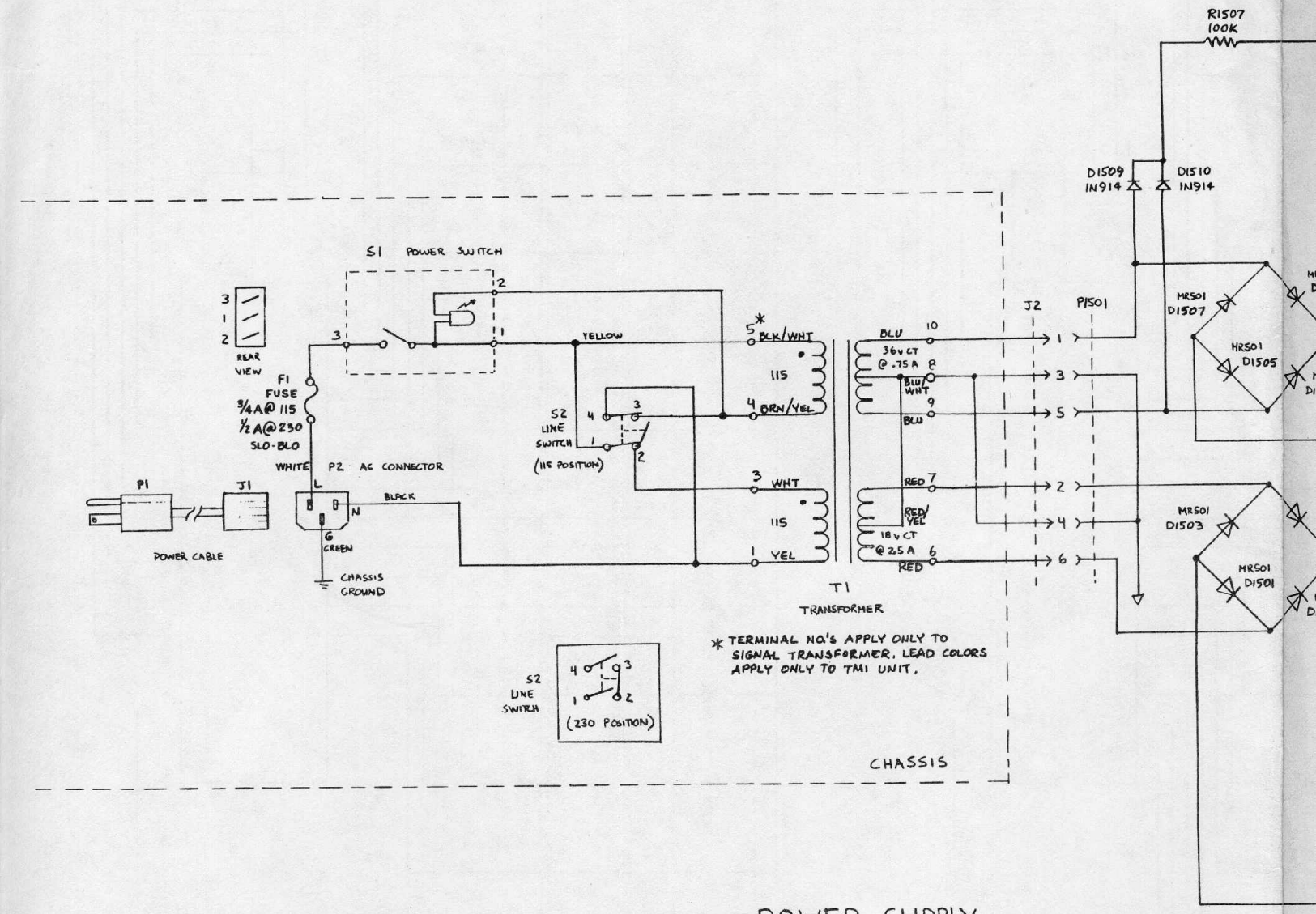

POWER SUPPLY

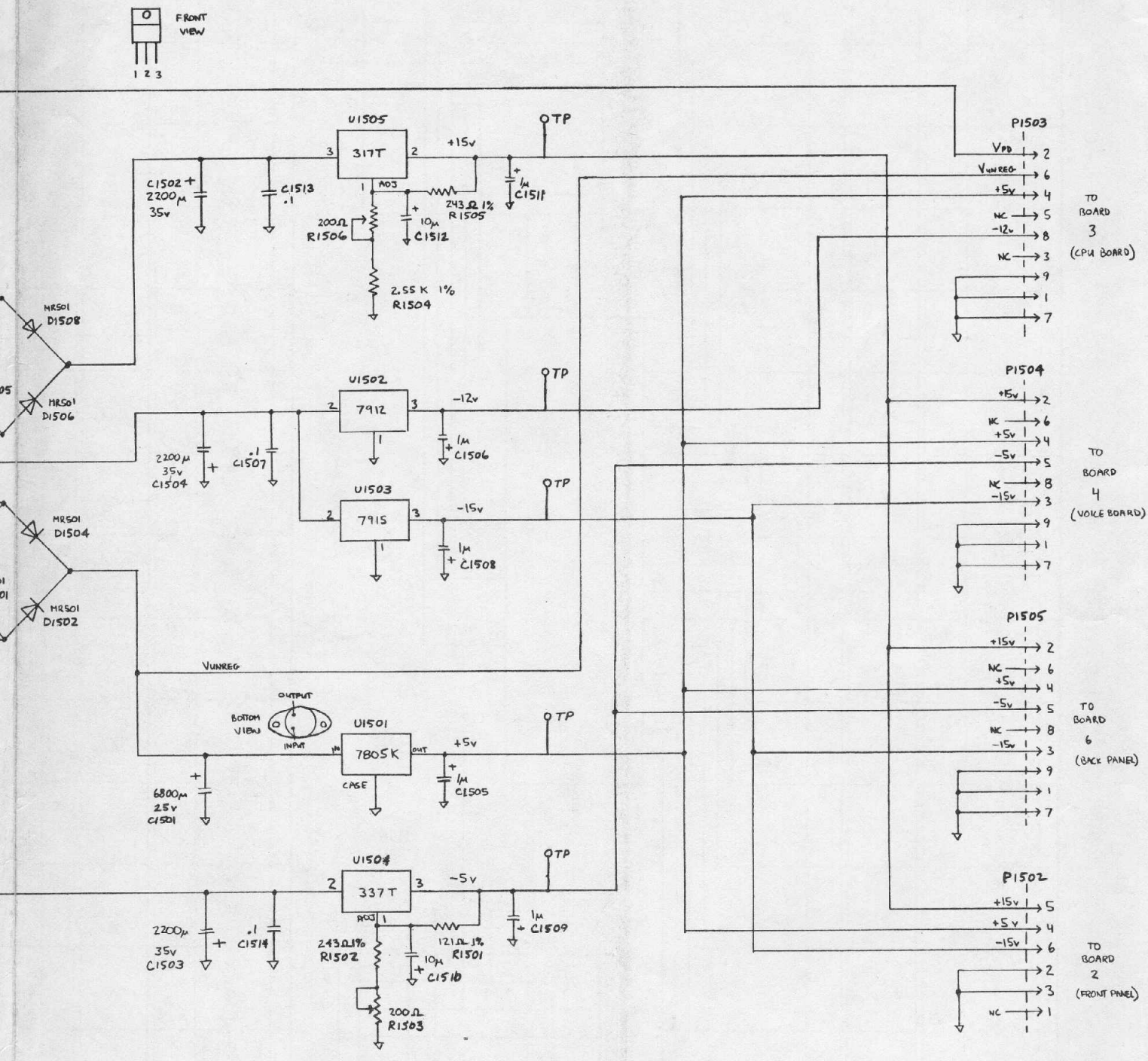

LAST USED: C1514
D1510
R1507
P1505
U1505

UNLESS OTHERWISE SPECIFIED DIMENSIONS ARE IN INCHES TOLERANCES ARE: FRACTIONS ± DECIMALS ± ANGLES ±					
MATERIAL					
FINISH					
DO NOT SCALE DRAWING	PART LAST S/N	DATE	SCR No	REVISION	LTR

SEQUENTIAL CIRCUITS INC

APPROVALS		DATE
DWN	DAVE	1/6/82
CHK	Donna	6/13/83
DSN		
PEN		
ISS		

TITLE: BOARD 15 SCHEMATIC

SIZE: | MODEL No. 1008

DOCUMENT No. SD 1008-15 | REV B

SCALE — | SHEET 1 OF 1

T8 DIAGNOSTIC PROCEDURES

Notes: Because the normal operating software completely fills the Z80 PROM, a seperate PROM is required to run these tests. The Z8002 diagnostics reside in the normal system PROMs. The diagnostics described in this procedure cover most of the digital circuitry in the machine; if a problem has been localized to a general area in hardware, portions of this procedure may be skipped.

Z80 TESTS

Notes: Z80 tests are selected using program select buttons 1 through 5. The current test number is displayed on the right program LED display.

1. Install Z80 diagnostic PROM (DIAGT8) in IC22 socket.

2. Disable Z8002 by shorting BUSREQ test point to ground with a clip lead.

3. Power-up the machine. The Z80 is now in a loop waiting for a program select button to indicate the desired test. Execute tests 1 through 5.

4. Troubleshoot any test failures.

Z8002 TESTS

Notes: The diagnostic software is accessed by momentarily grounding the -NMI test point (short duration less than one second; this pin is debounced in software). The program advances to the next test routine each time the pin is shorted (allow 5 seconds for the next test to begin). Disconnect the audio monitor system from the T8 before running these tests.

1. Remove the ground clip from -BUSREQ if present. Disable the Z80 using the Z80 -BUSREQ pin.

2. Start test number 1 using -NMI.

3. When test two is correctly executing, remove the Z80 -BUSREQ ground clip and select test number 4 of the Z80 diagnostics. Z80 and Z8002 common ram tests are now running simultaneously, which is a 100% test of common ram circuitry. If both tests pass, disable the Z80 again and proceed with Z8002 tests 3-17.

4. Troubleshoot any test failures,

Z80 DIAGNOSTIC TEST DESCRIPTIONS

TEST 1: I/O PORT TEST

This test alternately writes 55H (01010101) and AAH (10101010) to all output ports. At the same time, all input ports are being read. This test verifies all chip-select decoding circuitry.

TEST 2: LED TEST

All LEDs on the front panel are lit in sequence.

TEST 3: RAM TEST

A memory test is performed on Scratch Pad RAM, Program RAM, and Sequencer RAM. This test is destructive so programs and sequences should be saved to tape before executing the test. The results of the test are displayed on the PROGRAM SELECT LEDs as follows:

PROG SEL LED 1 = U312 failed RAM test.
PROG SEL LED 2 = U316 failed RAM test.
PROG SEL LED 3 = U311 failed RAM test.
PROG SEL LED 4 = U313 failed RAM test.
PROG SEL LED 5 = U317 failed RAM test.

No LEDs on except test # indicates RAM test passed.

TEST 4: COMMON RAM TEST

A memory test is performed on the lower 1k address space of Common RAM. The results are displayed on the PROGRAM SELECT LEDs according to the following format:

PROG SEL LED 1 = U335 failed RAM test.
PROG SEL LED 2 = U337 failed RAM test.

No LEDs on except test # indicates RAM test passed.

TEST 5: POT AND PRESSURE SENSOR TEST

Performs ADC of all pots (except Master Volume and Balance), Pitch Wheel, Mod Wheel, and all pressure sensors. The 8 bit sum of all conversion results is displayed in hex on the right program display. With all pots initialized to zero, each pot can be rotated to check that it covers the full range from 00H to FFH. The pressure sensors are tested in the same way, although it is normal for some sensors to not quite reach FFH.

Z8002 DIAGNOSTIC TEST DESCRIPTIONS

TEST 1: uOUT TOGGLE

This test requires a minimal amount of hardware to pass. It verifies correct PROM access, data and address bus integrity, correct power supplies, and other minimum Z8002 operating conditions.

Pass is indicated by a continous pulse train on the uOUT tst point.

TEST 2: COMMON RAM

This test checks the top half of common ram and associated arbitration logic. It may be run simultaneously with the Z80 common ram test, which accesses the lower half of common ram. In operation, the test writes the upper 1k of ram with a sequence of numbers. The sequence is then read and checked for errors. This cycle will continue to repeat unless an error is found.

Pass is indicated by a continuous train of widely-spaced pulses. The fail loop produces a high-frequency square wave.

TEST 3: DAC TEST

This test verifies interrupt, FIFO, and DAC hardware. An ascending sequence of numbers is repeatedly output to the FIFO, resulting in a ramp waveform at the DAC output buffer. All bits are used, and any hardware problems affecting the data will appear as nonlinearity in the ramp waveform. Problems with the low order bits may not be visible; these bits can be checked with tests 4-17.

TESTS 4-17: BIT TESTS

Each of these tests outputs a constant value to the DAC, which will appear on all sample holds. Starting with the DAC MSB, there is only one bit set per test. As tests are advanced, each bit value can be measured with a DVM if desired.

Note: Shorting -NMI after the last bit test will initiate test number 1. To execute the normal operating software, the power must be switched off.