YAMU-00379

DIGITAL SOUND PROCESSOR

SPX90

SERVICE MANUAL

INFO-CENTER

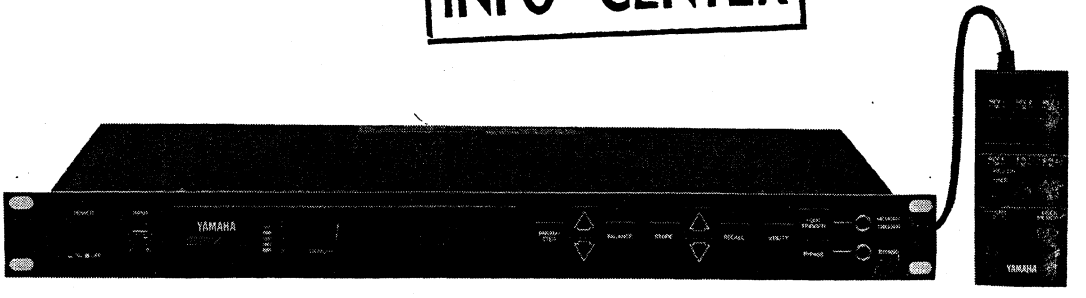

■CONTENTS

SPECIFICATIONS 1
BLOCK DIAGRAM 1
PANEL LAYOUT 2
ROOM SIZE CHART 3
SIGNAL FLOW 4
PRESET PROGRAM LIST 5
CIRCUIT BOARD LAYOUT 7
CHECKS AND ADJUSTMENTS 8
TEST PROGRAM 9
MIDI DATA FORMAT 11
LSI DATA TABLE 13
CIRCUIT BOARDS 15
PARTS LIST

006694

SINCE 1887 YAMAHA
NIPPON GAKKI CO., LTD. HAMAMATSU, JAPAN

IMPORTANT NOTICE

This manual has been provided for the use of authorized Yamaha Retailers and their service personnel. It has been assumed that basic service procedures inherant to the industry, and more specifically Yamaha Products, are already known and understood by the users, and have therefore not been restated.

WARNING: Failure to follow appropriate service and safety procedures when servicing this product may result in personal injury, destruction of expensive components and failure of the product to perform as specified. For these reasons, we advise all Yamaha product owners that all service required should be performed by an authorized Yamaha Retailer or the appointed service representative.

IMPORTANT: The presentation or sale of this manual to any individual or firm does not constitute authorization, certification, recognition of any applicable technical capabilities, or establish a principle-agent relationship of any form.

The data provided is believed to be accurate and applicable to the unit(s) indicated on the cover. The research, engineering, and service departments of Yamaha are continually striving to improve Yamaha products. Modifications are, therefore, inevitable and changes in specification are subject to change without notice or obligation to retrofit. Should any discrepancy appear to exist, please contact the distributor's Service Division.

WARNING: Static discharges can destroy expensive components. Discharge any static electricity your body may have accumulated by grounding yourself to the ground buss in the unit (heavy gauge black wires connect to this buss).

IMPORTANT: Turn the unit OFF during disassembly and parts replacement. Recheck all work before you apply power to the unit.

■SPECIFICATIONS

INPUT	
Number of Channels	Unbalanced × 1 (Phone Jack)
Nominal Level	−20 dBm/+4 dBm, Selectable
Impedance	10 k-ohms
Level Control	Volume, Max. Gain +12 dB
Level Monitor	7 LED Indicators
A/D CONVERSION	
Sampling Freq.	31.25 kHz
Quantization	Linear 16 Bit
Band Width	20 Hz to 12 kHz
Number of Channels	1
D/A CONVERSION	
Number of Channels	2
Sampling Freq.	31.25 kHz
Quantization	Linear 16 Bit
Band Width	20 Hz to 12 kHz
OUTPUT	
Number of Channels	Unbalanced × 2 (Phone Jack)
Nominal Level	−20 dBm/+4 dBm, Selectable
Impedance	600 ohms
Mixing	Direct Signal, Effect Signal
Bypass	ON/OFF
MEMORY	
Presets (ROM)	1~30
User Memory (RAM)	31~90 (Non Volatile) All parameters except Input Level, can be memorized Key On triggers the programs 18, 19, 20, 28 and 29
MIDI CONTROL	MIDI Channel (1 to 16, OMNI), (4 banks), Program Number (1 to 128) Note on/off is recognized only for pitch change A, D and freeze B
FRONT PANEL	
Display	16 character 2 lines LCD × 1, 2 digits numeric LED for Memory display, 7 LED indicators for level monitoring
Knob	Input Level Volume
Keys	Parameter/Balance/Data Increment/Data Decrement, Memory Store/ Recall/Data Increment/Data Decrement, Utility/Foot Trigger/ Bypass

ELECTRICAL CHARACTERISTICS	
Dynamic Range	Reverb: more than 75 dB Delay : more than 81 dB
Distortion	Bypassed Signal: less than 0.01% Effect Signal : less than 0.03%
Band Width	Bypassed Signal: 20 Hz to 20 kHz Effect Signal : 20 Hz to 12 kHz
POWER SUPPLY	
U. S. & Canadian Models	110V—120V, 60Hz
General Model	220V—240V, 50/60Hz
POWER CONSUMPTION	
U. S. & Canadian Models	20W
General Model	20W
DIMENSIONS (W × H × D)	480mm × 45.2mm × 285mm (18-7/8" × 1-3/4" × 11-1/4")
WEIGHT	3.2 kg (7 lbs)
OPTIONAL REMOTE CONTROL (model RC7)	PRESET PROGRAM 1~30, USER MEMORY 31~37

* *NOTE:Since natural sounding reverberation is mixed with the direct sound, and hence does not constitute 100% of the sound, the effective dynamic range will nearly always exceed 90 dB.*

** *0 dBu is 0.775 volts RMS. This value represents voltage across a high impedance input. dBu is the equivalent of dBu if specified across a 600 ohm load.*

■BLOCK DIAGRAM

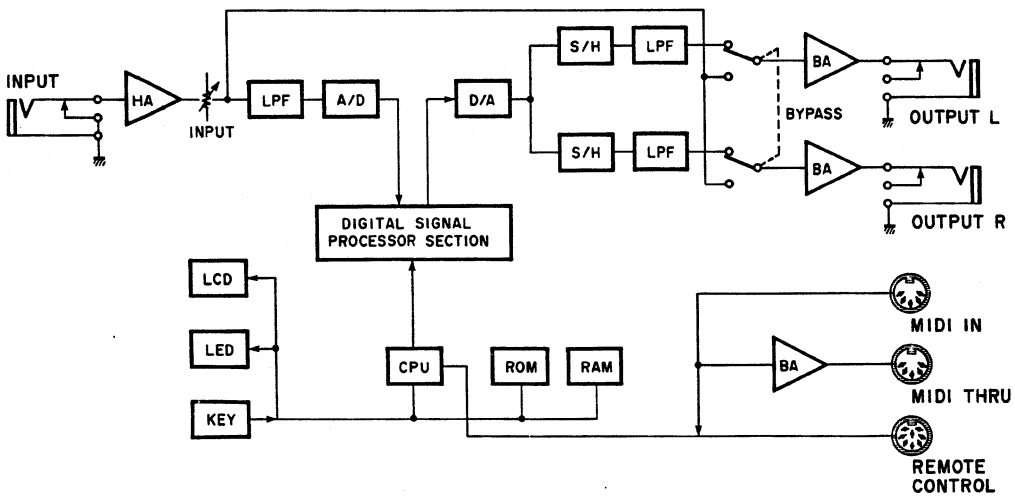

■PANEL LAYOUT

• Front Panel

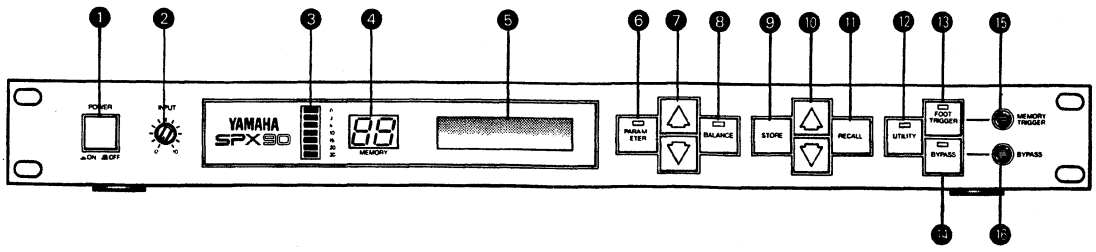

❶ Power ON/OFF Switch
❷ Input Level Control (0 ~ 10)
❸ Input Level Meter
❹ Memory Number LED
❺ LCD Program and Parameter Indicator
❻ Parameter Key
❼ Parameter Increment/Decrement Keys
❽ Balance/Output Level Key
❾ Store Key
❿ Memory Increment/Decrement Keys
⓫ Recall Key
⓬ Utility Key
⓭ Foot Trigger Key
⓮ Bypass Key
⓯ Memory/Trigger Footswitch Jack
⓰ Bypass Footswitch Jack

• Remote Controller

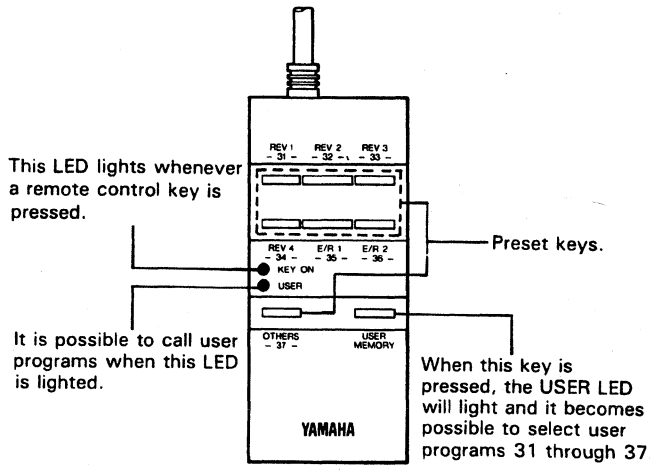

• Rear Panel

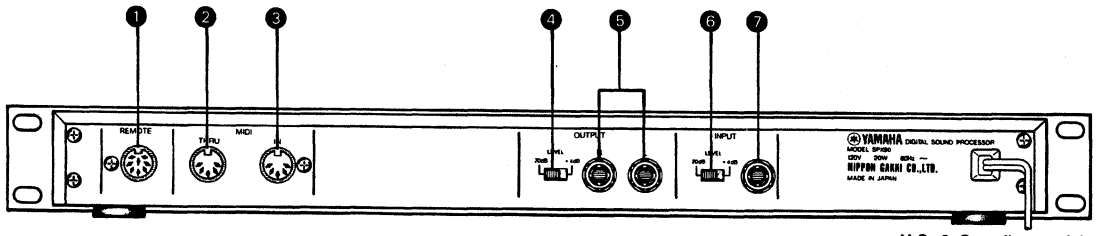

U.S. & Canadian models

❶ Remote Control Connector
❷ MIDI THRU terminal
❸ MIDI IN Terminal
❹ Output Level Selector (– 20 dB, + 4 dB)
❺ Output Jacks (L and R)
❻ Input Level Selector (– 20 dB, + 4 dB)
❼ Input Jack

■SIGNAL FLOW

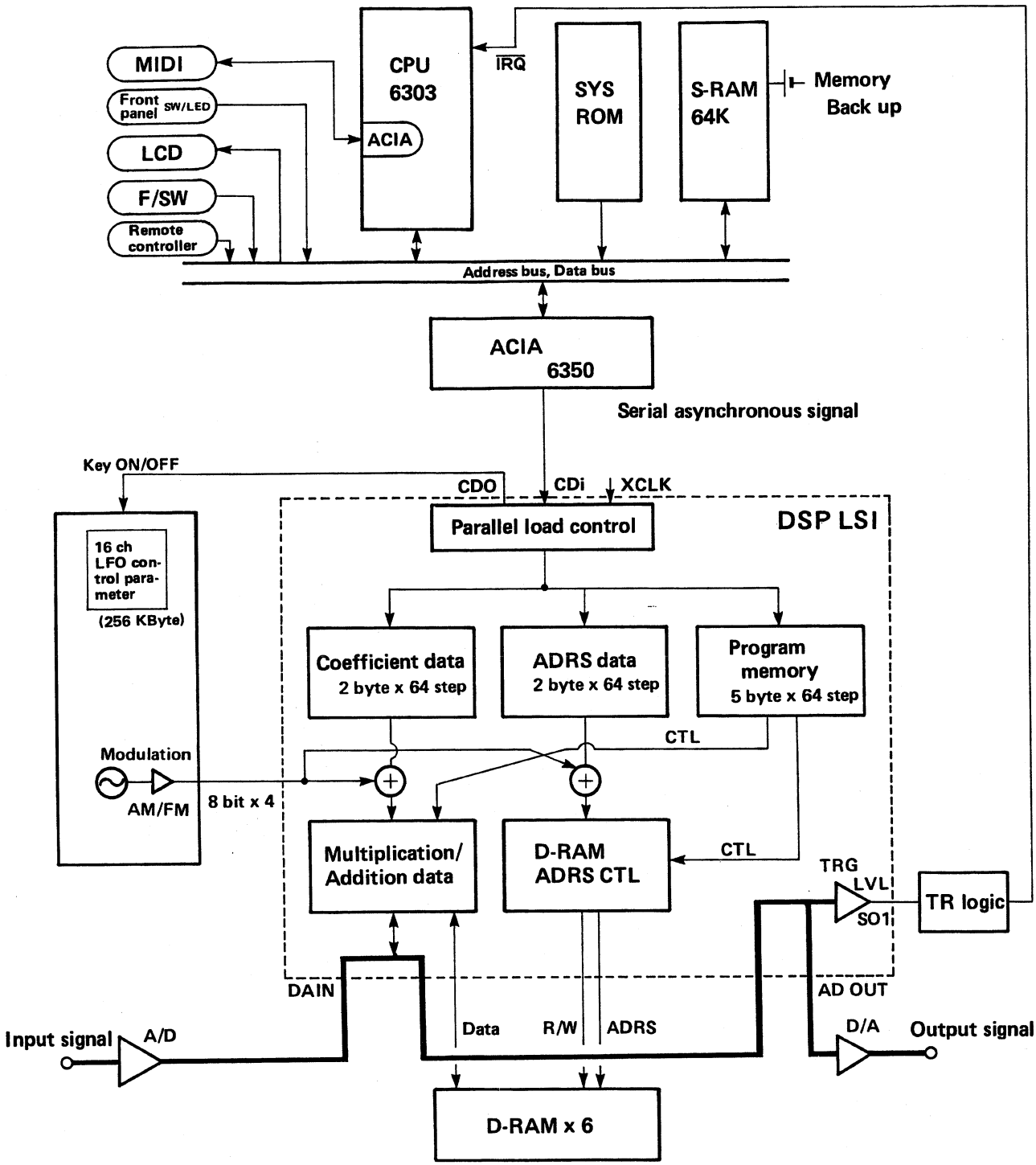
MIDI
Front panel SW/LED
LCD
F/SW
Remote controller
CPU 6303
ACIA
IRQ
SYS ROM
S-RAM 64K
Memory Back up
Address bus, Data bus
ACIA 6350
Serial asynchronous signal
Key ON/OFF
CDO
CDi
XCLK
DSP LSI
Parallel load control
16 ch LFO control parameter
(256 KByte)
Coefficient data 2 byte x 64 step
ADRS data 2 byte x 64 step
Program memory 5 byte x 64 step
CTL
Modulation
AM/FM
8 bit x 4
Multiplication/ Addition data
D-RAM ADRS CTL
CTL
TRG
LVL
SO1
TR logic
DAIN
AD OUT
Input signal
A/D
Data
R/W
ADRS
D/A
Output signal
D-RAM x 6

■ROOM SIZE CHART

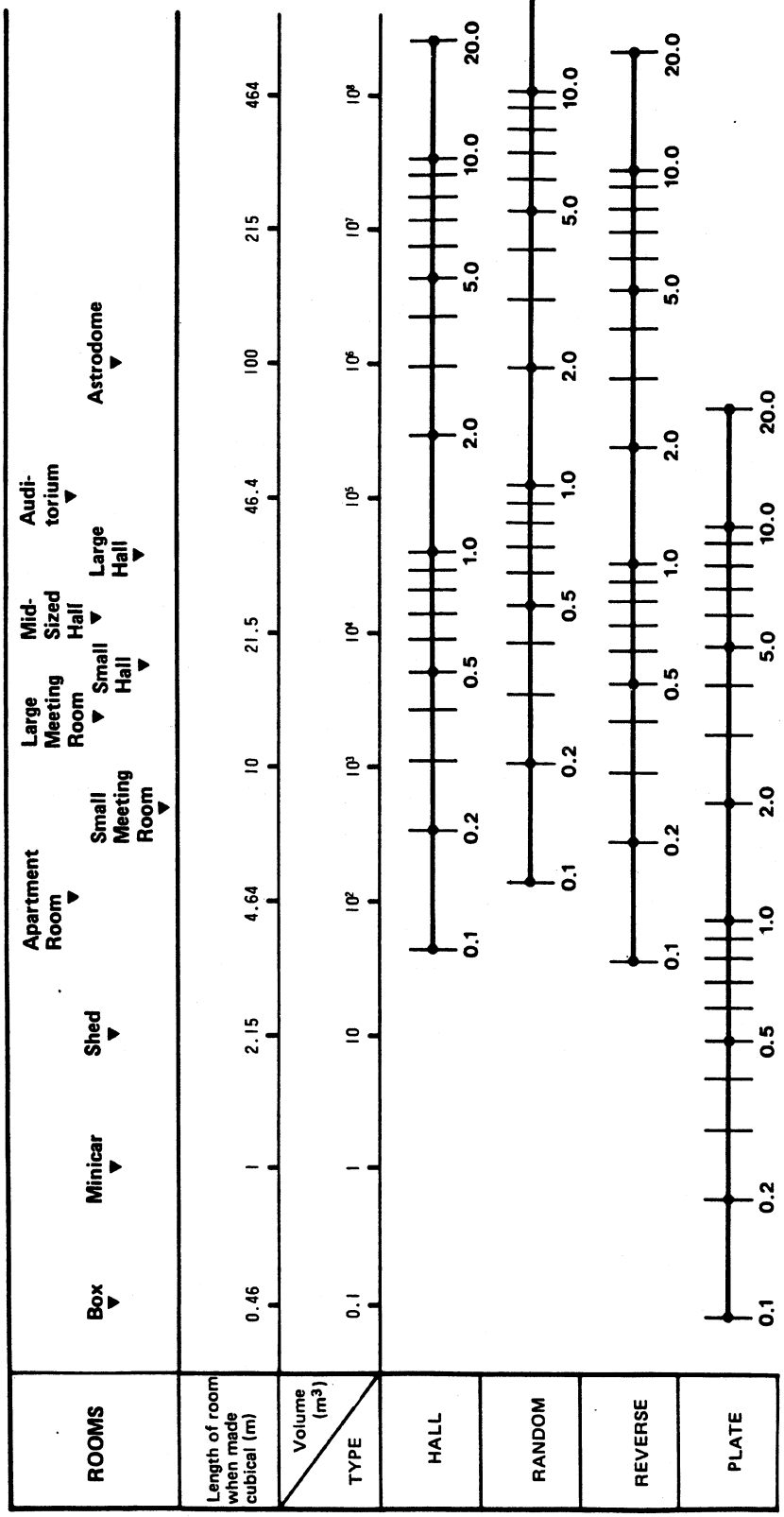

■PRESET PROGRAM LIST

MEM. No.	PROGRAM NAME	TYPE	PARAMETERS 1	2	3	4	5	6	7	8	9	BALANCE BALANCE	BALANCE OUT LVL
1	REV 1 HALL	REV	REV TIME 2.6s (0.3 ~ 99.0s)	HIGH 0.6 (0.1 ~ 1.0)	DELAY 30.0ms (0.1 ~ 50.0ms)	HPF THRU (THRU, 32Hz ~ 1.0kHz)	LPF 8.0kHz (1.0kHz ~ 11kHz, THRU)					100% (0 ~ 100%)	100% (0 ~ 100%)
2	REV 2 ROOM	"	REV TIME 1.5s (0.3 ~ 99.0s)	HIGH 0.7 (0.1 ~ 1.0)	DELAY 20.0ms (0.1 ~ 50.0ms)	HPF THRU (THRU, 32Hz ~ 1.0kHz)	LPF 8.0kHz (1.0kHz ~ 11kHz, THRU)					100% (0 ~ 100%)	100% (0 ~ 100%)
3	REV 3 VOCAL	"	REV TIME 2.4s (0.3 ~ 99.0s)	HIGH 0.5 (0.1 ~ 1.0)	DELAY 45.0ms (0.1 ~ 50.0ms)	HPF 80Hz (THRU, 32Hz ~ 1.0kHz)	LPF 8.0kHz (1.0kHz ~ 11kHz, THRU)					100% (0 ~ 100%)	100% (0 ~ 100%)
4	REV 4 PLATE	"	REV TIME 1.8s (0.3 ~ 99.0s)	HIGH 0.7 (0.1 ~ 1.0)	DELAY 10.0ms (0.1 ~ 50.0ms)	HPF 40Hz (THRU, 32Hz ~ 1.0kHz)	LPF 10.0kHz (1.0kHz ~ 11kHz, THRU)					100% (0 ~ 100%)	100% (0 ~ 100%)
5	EARLY REF. 1	E/R 1	TYPE HALL (HALL/RANDOM/REVERSE/PLATE)	ROOM SIZE 2.0 (0.1 ~ 20.0)	LIVENESS 5 (0 ~ 10)	DLY 10.0ms (0.1 ~ 400.0ms)	LPF THRU (1.0kHz ~ 11kHz, THRU)					100% (0 ~ 100%)	100% (0 ~ 100%)
6	EARLY REF. 2	E/R 2	TYPE HALL (HALL/RANDOM/REVERSE/PLATE)	ROOM SIZE 2.0 (0.1 ~ 20.0)	LIVENESS 5 (0 ~ 10)	DLY 10.0ms (0.1 ~ 400.0ms)	LPF THRU (1.0kHz ~ 11kHz, THRU)					100% (0 ~ 100%)	100% (0 ~ 100%)
7	DELAY L, R	DELAY	Lch DLY 100.0ms (0.1 ~ 500.0ms)	Lch F.B 0% (-99 ~ +99%)	Rch DLY 200.0ms (0.1 ~ 500.0ms)	Rch F.B 0% (-99 ~ +99%)	HIGH 1.0 (0.1 ~ 1.0)					100% (0 ~ 100%)	100% (0 ~ 100%)
8	STEREO ECHO	ECHO	Lch DLY 170.0ms (0.1 ~ 250.0ms)	Lch F.B 60% (-99 ~ +99%)	Rch DLY 178.0ms (0.1 ~ 250.0ms)	Rch F.B 58% (-99 ~ +99%)	HIGH 0.9 (0.1 ~ 1.0)					100% (0 ~ 100%)	100% (0 ~ 100%)
9	STEREO FLANGE A	MOD.	MOD. FRQ 2.5Hz (0.1 ~ 20.0Hz)	MOD. DEPTH 50% (0 ~ 100%)	MOD. DLY 1.2ms (0.1 ~ 100.0ms)	F.B GAIN 35% (0 ~ 99%)						50% (0 ~ 100%)	100% (0 ~ 100%)
10	STEREO FLANGE B	"	MOD. FRQ 0.5Hz (0.1 ~ 20.0Hz)	MOD. DEPTH 90% (0 ~ 100%)	MOD. DLY 1.0ms (0.1 ~ 100.0ms)	F.B GAIN 40% (0 ~ 99%)						75% (0 ~ 100%)	100% (0 ~ 100%)
11	CHORUS A	"	MOD. FRQ 0.2Hz (0.1 ~ 20.0Hz)	DM DEPTH 50% (0 ~ 100%)	AM DEPTH 40% (0 ~ 100%)							100% (0 ~ 100%)	100% (0 ~ 100%)
12	CHORUS B	"	MOD. FRQ 0.6Hz (0.1 ~ 20.0Hz)	DM DEPTH 50% (0 ~ 100%)	AM DEPTH 10% (0 ~ 100%)							100% (0 ~ 100%)	100% (0 ~ 100%)
13	STEREO PHASING	"	MOD. FRQ 1.1Hz (0.1 ~ 20.0Hz)	MOD. DEPTH 100% (0 ~ 100%)	MOD. DLY 3.0ms (0.1 ~ 8.0ms)							100% (0 ~ 100%)	100% (0 ~ 100%)
14	TREMOLO	"	MOD. FRQ 6.0Hz (0.1 ~ 20.0Hz)	MOD. DEPTH 50% (0 ~ 100%)								100% (0 ~ 100%)	100% (0 ~ 100%)
15	SYMPHONIC	"	MOD. FRQ 0.7Hz (0.1 ~ 20.0Hz)	MOD. DEPTH 50% (0 ~ 100%)								100% (0 ~ 100%)	100% (0 ~ 100%)
16	GATE REVERB	E/R2	TYPE RANDOM (HALL/RANDOM/REVERSE/PLATE)	ROOM SIZE 2.0 (0.1 ~ 20.0)	LIVENESS 5 (0 ~ 10)	DELAY 20.0ms (0.1 ~ 400.0ms)	LPF 6.3kHz (1.0kHz ~ 11kHz, THRU)					100% (0 ~ 100%)	100% (0 ~ 100%)
17	REVERSE GATE	"	TYPE REVERSE (HALL/RANDOM/REVERSE/PLATE)	ROOM SIZE 3.3 (0.1 ~ 20.0)	LIVENESS 5 (0 ~ 10)	DELAY 25.0ms (0.1 ~ 400.0ms)	LPF THRU (1.0kHz ~ 11kHz, THRU)					100% (0 ~ 100%)	100% (0 ~ 100%)
18	ADR-NOISE GATE	GATE	TRG. LEVEL 65 (1 ~ 100)	TRG. DLY -7ms (-100 ~ 100ms)	TRG. MSK 5ms (5 ~ 32000ms)	ATTACK 5ms (5 ~ 32000ms)	DECAY 5ms (5 ~ 32000ms)	DECAY LVL 100% (0 ~ 100%)	HOLD 90ms (1 ~ 30000ms)	RELEASE 5ms (5 ~ 32000ms)	MIDI TRG. OFF (OFF/ON)	100% (0 ~ 100%)	100% (0 ~ 100%)
19	COMPRESSOR	"	TRG. LEVEL 89 (1 ~ 100)	TRG. DLY -25ms (-100 ~ 100ms)	TRG. MSK 420ms (5 ~ 32000ms)	ATTACK 22ms (5 ~ 32000ms)	HOLD 28ms (1 ~ 30000ms)	HOLD LEVEL 1% (0 ~ 100%)	RELEASE 525ms (5 ~ 32000ms)	MIDI TRG. OFF (OFF/ON)		100% (0 ~ 100%)	100% (0 ~ 100%)
20	REVERB & GATE	R&G	REV TIME 2.0s (0.3 ~ 99.0s)	HIGH 0.6 (0.1 ~ 1.0)	DELAY 10.0ms (0.1 ~ 50.0ms)	HPF THRU (THRU, 31Hz ~ 1.0kHz)	LPF THRU (1.0kHz ~ 11kHz, THRU)	TRG. LEVEL 65 (1 ~ 100)	HOLD 150ms (1 ~ 30000ms)	RELEASE 5ms (5 ~ 32000ms)	MIDI TRG. OFF (OFF/ON)	100% (0 ~ 100%)	100% (0 ~ 100%)
21	PITCH CHANGE A	PITCH	PITCH 0 (-12 ~ 12)	FINE 0 (-100 ~ 100)	DELAY 0.1ms (0.1 ~ 400.0ms)	F.B GAIN 0% (0 ~ 99%)	BASE KEY C3 (OFF, C1 ~ C6)					100% (0 ~ 100%)	100% (0 ~ 100%)
22	PITCH CHANGE B	"	1 PITCH 0 (-12 ~ 12)	1 FINE 8 (-100 ~ 100)	1 DLY 0.1ms (0.1 ~ 400.0ms)	2 PITCH 0 (-12 ~ 12)	2 FINE -8 (-100 ~ 100)	2 DLY 20.0ms (0.1 ~ 400.0ms)				100% (0 ~ 100%)	100% (0 ~ 100%)
23	PITCH CHANGE C	"	L PITCH 0 (-12 ~ 12)	L FINE 10 (-100 ~ 100)	L DLY 0.1ms (0.1 ~ 200.0ms)	R PITCH 0 (-12 ~ 12)	R FINE -8 (-100 ~ 100)	R DLY 0.1ms (0.1 ~ 200.0ms)				100% (0 ~ 100%)	100% (0 ~ 100%)
24	PITCH CHANGE D	"	PITCH 0 (-12 ~ 12)	FINE 0 (-100 ~ 100)	DELAY 0.1ms (0.1 ~ 400.0ms)	F.B GAIN 0% (0 ~ 99%)	BASE KEY C3 (OFF, C1 ~ C6)					100% (0 ~ 100%)	100% (0 ~ 100%)
25	FREEZE A	FREEZE	REC MODE AUTO (MANUAL/AUTO)	TRG. DLY -5ms (-500 ~ 500ms)	RECORD	OVER DUB	PLAY	START 0 (0 ~ 500)	END 500 (0 ~ 500)	INPUT TRG. OFF (OFF/ON)		100% (0 ~ 100%)	100% (0 ~ 100%)
26	FREEZE B	"	REC MODE MANUAL (MANUAL/AUTO)	TRG. DLY -50ms (-500 ~ 500ms)	RECORD	OVER DUB	PLAY	PITCH 0 (-12 ~ 12)	FINE 0 (-100 ~ 100)	BASE KEY C3 (OFF, C1 ~ C6)		100% (0 ~ 100%)	100% (0 ~ 100%)
27	AUTO PAN	PAN	PAN SPEED 0.7Hz (0.1 ~ 20.0Hz)	DIRECTION L→R / L→R/L→R	DEPTH 75% (0 ~ 100%)							100% (0 ~ 100%)	100% (0 ~ 100%)
28	TRIGGERED PAN	"	TRG. LEVEL 65 (1 ~ 100)	TRG. DLY -10ms (-100 ~ 100ms)	TRG. MSK 1000ms (5 ~ 32000ms)	ATTACK 22ms (5 ~ 32000ms)	PANNING 525ms (5 ~ 32000ms)	RELEASE 840ms (5 ~ 32000ms)	DIRECTION L→R (L→R/L→R)	L/R BALANCE 30% (0 ~ 100%)	MIDI TRG. OFF (OFF/ON)	100% (0 ~ 100%)	100% (0 ~ 100%)
29	DELAY VIBRATO	VIB	TRG. LEVEL 100 (1 ~ 100)	VIB DLY 400ms (0 ~ 30000ms)	VIB RISE 1400ms (5 ~ 32000ms)	VIB FRQ 7.0Hz (0.1 ~ 20.0Hz)	VIB DEPTH 40% (0 ~ 100%)	MIDI TRG. ON (OFF/ON)				100% (0 ~ 100%)	100% (0 ~ 100%)
30	PARAMETRIC EQ.	PEQ	HPF THRU (THRU, 32Hz ~ 1.0kHz)	MID FRQ 500Hz (315Hz ~ 4.0kHz)	MID GAIN 0dB (-15 ~ 15dB)	MID Q 1.0 (0.5 ~ 5.0)	HI FRQ 2.0kHz (800Hz ~ 8.0kHz)	HI GAIN 0dB (-15 ~ 15dB)	HI Q 1.0 (0.5 ~ 5.0)	LPF THRU (1.0kHz ~ 10.0kHz, THRU)	DLY 0.1ms (0.1 ~ 400.0ms)	100% (0 ~ 100%)	100% (0 ~ 100%)

■CIRCUIT BOARD LAYOUT

U.S. & Canadian models

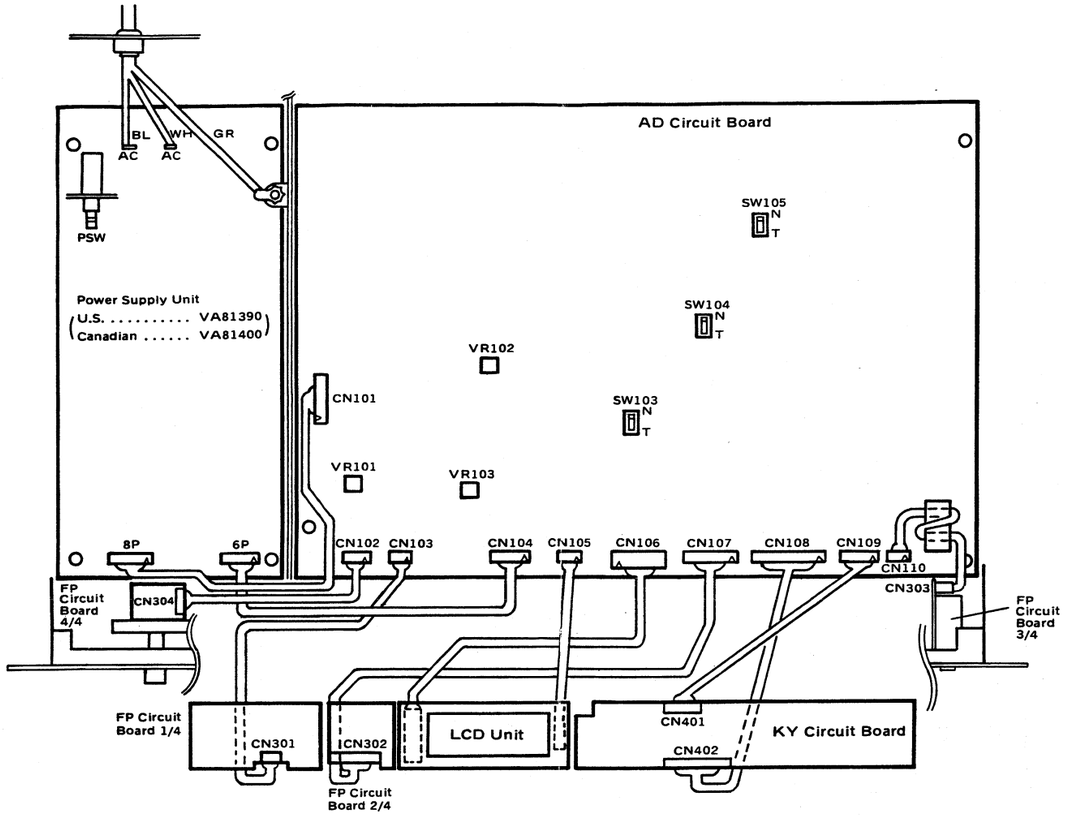

South European, WG & Australian models

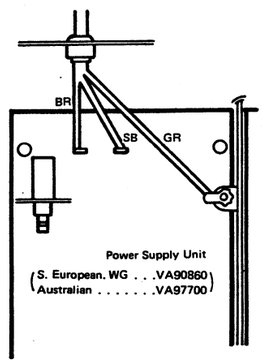

Note 1.] This Circuit Board layout shows the U.S. and Canadian specifications.
Note 2.] For the departures of wirings between destinations, refer to the figures at left.
Note 3.] After completing inspection, make sure the SW103, 104 and SW105 are set at NORMAL.

Adjustment Pots:
VR101 . . . . .A/D gain adjustment
VR102 . . . . .D/A gain adjustment
VR103 . . . . .A/D offset adjustment

■CHECKS AND ADJUSTMENTS

1. PREPARATIONS

1-1 Preparatory Settings
- Unless otherwise specified, the volumes and switches on the front panel are to be set as follows:
  INPUT VOL. . . . . .MAX
  INPUT LEVEL SW. . . . . .+ 4 dB
  OUTPUT LEVEL SW. . . . . .+ 4 dB
- Leave the slide switches SW103, SW104 and SW105 within the AD circuit set to the TEST position.
- The load of the OUTPUT L and R connectors are to each be serially connected to a load resistors (300Ω + 300Ω).

1-2 Measuring Instruments
- Prepare the following: AF signal generator, electronic voltmeter, distortion meter, oscilloscope, load resistors on.
- For the distortion measurement, a low-pass filter with cut-off frequency of 80kHz and –6dB/OCT must be used.
- For the noise level measurement, a low-pass filter with the cut-off frequency of 12.7kHz and –6dB/OCT must be used.
- The output impedance of the AF signal generator must be less than 600Ω.
- The input impedance of the measuring instruments must be over 1 MΩ.

2. INSPECTION

2-1 Gain

2-1-1 Total gain (Reverberation signal)
When the input signals below are applied to the INPUT connector, switching of the LEVEL switch enables the output signals of the table below to be obtained at the OUTPUT L and R connectors. (After inspection, set the LEVEL switch to +4dB.)

INPUT LEVEL	OUTPUT LEVEL	INPUT	OUTPUT
+ 4	+ 4	– 6 dBm	+ 4 ± 1 dBm
+ 4	– 20	– 6 dBm	– 20 ± 3 dBm
– 20	+ 4	– 30 dBm	+ 4 ± 3 dBm
– 20	– 20	– 30 dBm	– 20 ± 3 dBm

2-1-2 Bypass circuit
When the BYPASS switch is switched ON accordding to the conditions of Table 2-1-1, output signals of +4 ± 2 dBm are obtained at the L and R OUTPUT connectors. (After inspection, set the BYPASS switch to OFF.)

2-2 Frequency Characteristics
When an input signal of approximately –10 dBm is applied from the INPUT connector in the accordding to the status of Table 2-1-1 and the conditions stated in section 2-1-2, the frequency characteristics of the OUTPUT L and R connectors are within the range listed in the table below. The reference frequency used is 1kHz.

	20Hz ~ 11kHz	12kHz	20kHz
2-1-1	+ 1 ~ – 2	+ 1 ~ – 5	–
2-1-2	+ 1 ~ – 2	+ 1 ~ – 2	+ 1 ~ – 3

(dB)

2-3 Distortion Factor

2-3-1 Maximum output distortion
With the conditions set according to Table 2-1-1, the distortion factor should be less than 0.1%.

2-3-2 Distortion factor of distortionless output
When a 1kHz input signal is applied to the INPUT connector, the distortion factor just before the clipping of the output waveforms at the L and R OUTPUT connectors should be less than 0.02% (OUTPUT waveforms can be observed by utilizing the monitor output of the distortion meter or connect) an oscilloscope to the output load.

2-4 Maximum Output
When a 1kHz input signal is applied to the INPUT connector according to the conditions of section 1-1, the maximum level of the output signal at the L and R OUTPUT connectors should be +18 dBm with a distortion factor of less than 1%.

2-5 Meter Sensitivity
When a 1kHz input signal is applied to the INPUT connector according to the conditions of section 1-1, and the input signal has been adjusted so that an output signal of +10 ± 4 dBm can be obtained at the L and R OUTPUT connectors, the '0' level of the level meter is illuminated.
At this point, all LED indicators below the '0' level are illuminated.

2-6 Muting Circuit
After the POWER switch is turned ON, muting is effective for three to four seconds, and no output signals are generated. After this time delay output signals can be obtained at each OUTPUT connector.
When the POWER switch is turned OFF, muting becomes effective so that no clicking noise is generated.

3. ADJUSTMENT

3-1 A/D Gain Adjustment
Apply an input signal of +8.5 dBm at 1kHz to the INPUT connector and adjust VR 101 so that the output signal is clipping slightly at the L OUTPUT connector. Adjust VR 103 so that the clipping signal is vertically symmetrical. (Observe the distortion waveforms by utilizing the monitor output of the distortion meter or connect the oscilloscope to the output load.)
Afterwards, adjust VR 101 until the distortion waveforms of the L OUTPUT connector for minimum distortion.

3-2 D/A Gain Adjustment
With the same input conditions as stated in section 3-1, adjust VR 102 so that the output signal of the L OUTPUT connector becomes +18.5 ± 0.2 dBm.

3-3 Noise Level Adjustment
After performing spectons 2-1 through 2-6, set the slide switches SW102, 104, and 105 on the AD circuit board to the NORMAL position and set the BALANCE level to '0' (DIRECT).
When the INPUT is opened, the noise levels of the L and R OUTPUT connectors should be less than –65dBm. If noise levels are not within rated levels, adjust VR 103 on the AD circuit board so that the noise levels are within rated values.
Note that this adjustment must be performed approximately five seconds after the POWER switch is switched ON. At this point, perform the Offset Check using Test Program # 5, after the level clicking noise or offset has been minimized, and verify that the noise meets the previously stated specification.

■TEST PROGRAM

1) Contents of Test Program

① Operation Check of Liquid Crystal Display (LCD) Unit
② LED Illumination Check
③ Switch Operation Check
④ MIDI Input/Output Check
⑤ A/D Offset Adjustment
⑥ DRAM Check

The SPX90 has built-in test programs for checking its various functions. The checking procedures and contents of the test programs are described below.
Note that check sum of the ROM, the S-RAM read/write test, and the checking of the control circuits of DSP and MOD are automatically performed during normal operation by the main program when the POWER switch is switched ON.

2) Activation of the Test Program

To activate the Test Program depress and hold down the PARAMETER key and FOOT TRIGGER key, while turning ON the POWER switch of the SPX90.

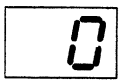

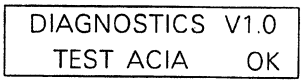

3) Selection of Each Routine of the Test Program

After selecting the desired routine using the MEMORY UP ⊡ and DOWN ⊡ keys, press the RECALL key, to initiate the test.

4) Return to Normal Operation From the Test Program

Normal operation is restored after Test 6 is completed, providing that Tests 1 through 5. An alternate exit procedure can performed by incrementing to 90 on the LED readout and then press the RECALL key. Normal operation can be restored regardless of whether or not Tests. 1 through 5 were executed.

① **Test Program #1. . . . . .LCD Check**
Press the MEMORY UP key, to select Routine No. 1, then press the RECALL key, to initiate the test.
This test repeats the ON/OFF operation of all LCD display dots five times, to visually confirm that the entire display area is normal.

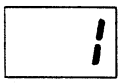

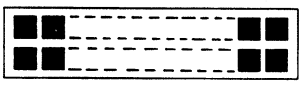

② **Test Program #2. . . . . LED Illumination Check**
Press the MEMORY key to select Routine No. 2, then press the RECALL key to initiate the test.
This test illuminates the seven-segment LED in the sequence of 0, 11, 22 to 99. The test illuminates the LED indicators of the key switches in the following sequence: PARAMETER, BALANCE, UTILITY, FOOT TRIGGER, and BYPASS. Afterwards, all segments of the seven-segment LED display and all LED indicators of the key switches are illuminated for about three seconds.

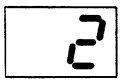

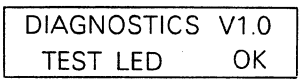

③ **Test Program #3. . . . . Switch Operation Check**
Press the MEMORY UP key, to select Routine No. 3, then press the RECALL key to intiate the test.
Now press the following keys in sequence . . . PARAMETER, Parameter UP (⇧), Parameter Down (⇩), BALANCE, UTILITY, FOOT TRIGGER, and BYPASS. This procedure causes the numbers of the LCD Unit to change from 01 to 11 as shown in the figure below. If all switches are good then 'OK' is displayed on the LCD Unit.

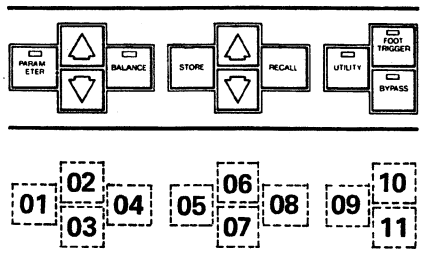

LCD display

NOTE: If the keys are not pressed in the proper sequence, the LCD readout will display be NG (No GOOD). To restore the test, press the RECALL key then start the procedure from the beginning.

④ **Test Program #4. . . . . .MIDI Input/Output Check**
Connect the MIDI IN connector to the MIDI THRU connector using the MIDI cable. Set SW 105 on the AD circuit board to the TEST position.
Press the MEMORY key, to select Routine No. 4, then press the RECALL key to initiate the test.

NOTE: In case of a malfunctioning MIDI input/output or improper connection of the MIDI connectors, "NG" will be displayed.

⑤ **Test Program #5. . . . . .A/D Offset Adjustment**
Set SW103 and SW104 on the AD circuit board to the TEST position. Connect the L and R OUTPUT to a power amplifier and set the controls so that sound can be heard from the speakers.
Press the MEMORY UP key, to select Routine No. 5, then press the RECALL key to initiate the test.
The phase of the output signal from the OUTPUT connector is inverted approximately every 500 msec and an offset voltage is present, confirmation can be performed by listening to the clicking sound that is produced. Adjusting VR 103 on the AD circuit board, so that the clicking sound is minimized.

⑥ **Test Program #10 ~ #17. . . . . DRAM Check**
Press the MEMORY UP key, to select Routine Nos. 10 to 17, then press the RECALL key to initiate the test. The LCD readout will display the code which corresponds to the appropriate test as shown in Table 6-1.

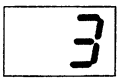

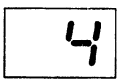

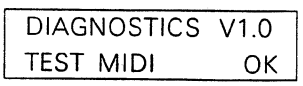

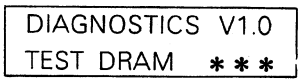

Routine No.	MSB	IC Number		LSB	* * *
10	116	117	118	119	THR
11	117	118	119	120	04B
12	118	119	120	121	08B
13	119	120	121	0000	12B
14	120	121	0000	0000	16B
15	121	0000	0000	0000	20B
16	1000	0000	0000	0000	−MX
17	0111	1111	1111	1111	+MX

(Table 6-1)

■MIDI DATA FORMAT

● Channel Information

○ Channel Voice Message

(1) Program Change

Status	1100nnnn	(Cn)	n = channel no.
Program no.	0ppppppp		p = 0 ~ 127

(2) Key Off

Status	1000nnnn	(8n)	n = channel no.
Note no.	0kkkkkkk		k = 0 ~ 127
Velocity	0vvvvvvv		v = 0 ~ 127

(3) Key On

Status	1001nnnn	(9n)	n = channel no.
Note no.	0kkkkkkk		k = 0 ~ 127
Velocity	0vvvvvvv		v = 0 ~ 127

● System Information

○ System Exclusive Message

Status	11110000	(F0)	
ID no.	01000011	(43)	
Substatus/ch. no.	0000nnnn	(0n)	n = channel no.
Parameter no.	nnnnnnnn		
Data no.	dddddddd		
Eox (End of exclusive info.)	11110111	(F7)	

[Digital Sound Processor] Date : 10/5, 1985
Model SPX90 MIDI Implementation Chart Version : 1.0

Function ...		Recognized	Remarks
Basic	Default	1 - 16	memorized
Channel	Changed	1 - 16	
Mode	Default	OMNI OFF/OMNI ON	memorized
	Messages	x	
	Altered	x	
Note Number		o 0 - 127 X1	
	True voice	x	
Velocity	Note ON	x	
	Note OFF	x	
After Touch	Key's	x	
	Ch's	x	
Pitch Bender		x	
Control Change		x	
Prog Change	True #	o 0 - 127 X2	
System Exclusive		o	
System Common	Song Pos	x	
	Song Sel	x	
	Tune	x	
System Real Time	Clock	x	
	Commands	x	
Aux Mes- sages	Local ON/OFF	x	
	All Notes OFF	x	
	Active Sense	x	
	Reset	x	
Notes		X1 Note ON/OFF is recognized only for pitch change and freeze B. X2 For program 1 - 128, memory #1 - #90 is selected.	

Mode 1 : OMNI ON, POLY Mode 2 : OMNI ON, MONO o : Yes
Mode 3 : OMNI OFF, POLY Mode 4 : OMNI OFF, MONO x : No

■LSI DATA TABLE

YM3804 Digital Signal Processor (DSP)

Pin No.	Name	I/O	Function	Pin No.	Name	I/O	Function
1	MDAT 15	I/O	I/O pins connected to memory data bus	64	VSS	—	Ground (0 V)
2	MDAT 14	I/O		63	MDAT 16	I/O	I/O pins connected to memory's data bus
3	MDAT 13	I/O		62	MDAT 17	I/O	
4	MDAT 12	I/O		61	MDAT 18	I/O	
5	MDAT 11	I/O		60	MDAT 19	I/O	
6	MDAT 10	I/O		69	MDAT 20	I/O	
7	MDAT 9	I/O		68	MDAT 21	I/O	
8	MDAT 8	I/O		67	MDAT 22	I/O	
9	MDAT 7	I/O		66	MDAT 23	I/O	
10	MDAT 6	I/O		65	MOD 0	I	Inputs to accept modulation signal from MOD
11	MDAT 5	I/O		64	MOD 1	I	
12	MDAT 4	I/O		63	MOD 2	I	
13	MDAT 3	I/O		62	MOD 3	I	
14	MDAT 2	I/O		61	MOD 4	I	
15	MDAT 1	I/O		60	MOD 5	I	
16	MDAT 0	I/O		49	MOD 6	I	
17	SI1	I	Serial data input	48	MOD 7	I	
18	SI0	I		47	$\overline{TC}$	I	Initial Clear signal input
19	SO1	O	Serial data output	46	$\overline{CS}$	I	Chip Select input
20	SO0	O		45	CLK	I	Master Clock input
21	XMD	I	Synchronous/asynchronous select signal input for serial interfaces CDI and CDO	44	SYNCW	I	System sync. signal input
22	XCLK	I	Data send/receive clock input used when serial interface is placed in asynchronous mode	43	TEST 1	I	Chip test input (+5 V)
23	$\overline{TO}$	O	Time Out output	42	TEST R	I	
24	$\overline{CRS}$	I	CDI data counter reset input	41	MADR 0	O	Outputs connected to memory's address bus
25	CDO	O	Serial data output used for connecting serial interfaces in cascade	40	MADR 1	O	
26	CDI	I	Serial interface input	39	MADR 2	O	
27	TM1	O	General-purpose timing signal output	38	MADR 3	O	
28	$\overline{REF}$	O	Memory control signal output	37	MADR 4	O	
29	$\overline{OE}$	O		36	MADR 5	O	
30	$\overline{WE}$	O		35	MADR 6	O	
31	$\overline{CAS}$	O		34	MADR 7	O	
32	$\overline{RAS}$	O		33	VDD	—	Power supply input (+5 V)

YM3807 Modulation Data Generator (MOD)

Pin No.	Name	I/O	Function	Pin No.	Name	I/O	Function
1	N C	I	Initial Clear signal input (presently not used)	24	V S S	—	G N D
2	TEST 0	I	Chip test inputs	23	MDSO 1	O	Serial waveform data outputs
3	TEST 1	I		22	MDSO 0	O	
4	M D 7	O	8-bit parallel multiplexed outputs for waveform data	21	MDSI 1	I	Data inputs to MOD's internal adder
5	M D 6	O		20	MDSI 0	I	
6	M D 5	O		19	C D I	I	Serial interface input
7	M D 4	O		18	C D O	O	Serial data output used to connect serial interfaces in cascade
8	M D 3	O		17	X C L K	I	Data send/receive clock input for asynchronous mode
9	M D 2	O		16	X M D	I	Synchronous (L)/asynchronous (H) select input for serial interfaces CDI and CDO
10	M D 1	O		15	$\overline{\text{C R S}}$	I	Reset input to reset the serial input CDI data counter
11	M D 0	O		14	SYNCW	I	System sync. signal input
12	V D D	—	+ 5 V	13	C L K	I	Master clock input

■CIRCUIT BOARDS

• AD CIRCUIT BOARD

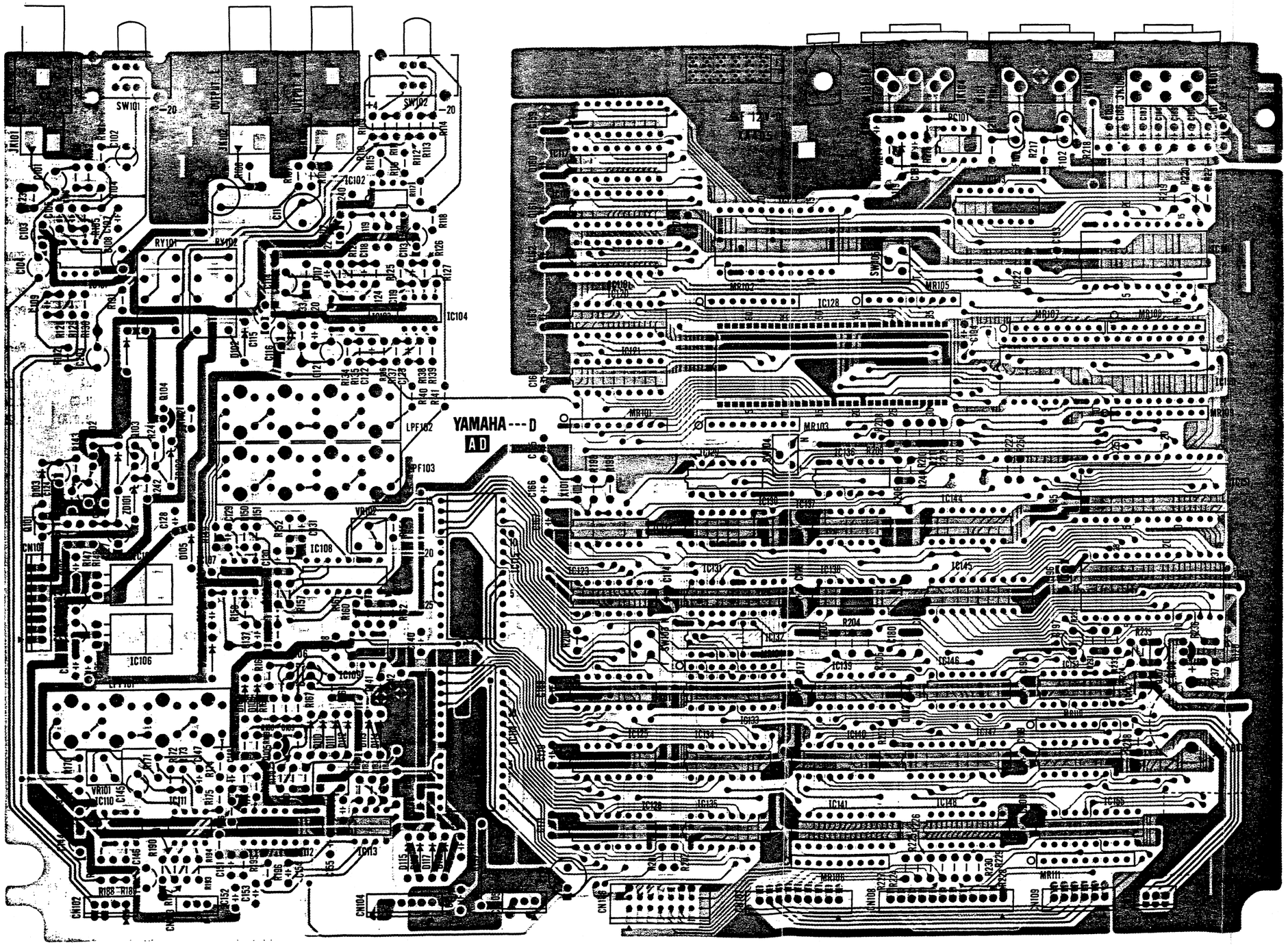

Circuit Board :XA405 B

IC101,103,104, 110,111	:NJM4558DV	(iG001390)
IC102	:NJM4556	(XA772001)
IC105	:NJM7815A	(iG147400)
IC106	:NJM7915A	(iG147500)
IC107,113	:M5238P	(XA013001)
IC108,112	:TC4053BP	(iG055100)
IC109	:IR9311	(iG134900)
IC114,115	:PCM54HP	(XA566001)
IC116~121	:M5M4416	(iG122320)
IC122,132	:74HC04	(iR000480)
IC123,124	:74HC595	(iR059500)
IC125	:HD14549B	(iR104500)
IC126	:HD14559BP	(iR104600)
IC127	:YM3807	(iT380700)
IC128	:YM3804	(iT380400)
IC129,137	:74HC74	(iR007480)
IC130,138	:74HC163	(iR016380)
IC131	:TBP28L22N	(XA542001)
IC133,147	:74HC273	(iR027380)
IC134,135	:TC74HC166	(iR016600)
IC136	:HD74LS266	(XA379001)
IC139,143	:TD62003P	(iG127300)
IC140	:74HC174	(iR017480)
IC141	:TC74HC245	(iR024500)
IC142	:PST518	(iG124300)
IC144	:74HC139	(iR013980)
IC145	:74HC373	(iR037380)
IC146	:74HC138	(iR013880)
IC148	:TD62506P	(iG138700)
IC149	:HD6350P	(iG132700)
IC150	:HD6303RP	(iG093500)
IC151	:EPROM	(XA519001)
IC152	:TC5565L-12	(iG148500)
IC153	:74HC14	(iR001480)
IC154	:74HC367	(iR036780)
IC155	:74HC244	(iR024480)
Q101,103,107	:2SC1815(Y)	
Q102,104,105, 108	:2SA1015(Y)	
Q106	:2SC1815Twin	
D101~104, 107~120	:1SS176	
D105,106	:W03B	
ZD101,102	:RD5.6EB2	
LPF101~103	:PFB-4	
RY101,102	:RZ-12	
PC101	:TLP552	
X101	:Ceramic Resonator 4MHz	
F101,102	:0.0022μF	

• KY CIRCUIT BOARD

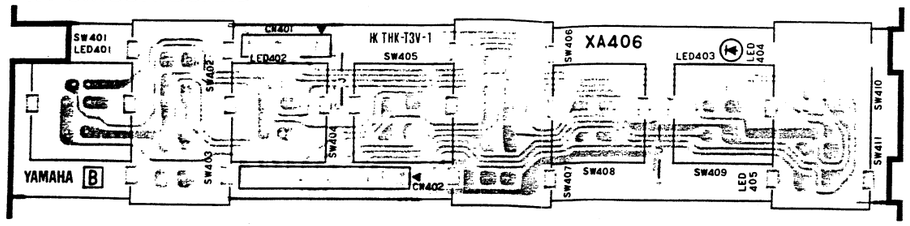

Circuit Board :XA406 B

3NA-VA84910 ⚠

LED :VA26230

• FP CIRCUIT BOARD 1/4

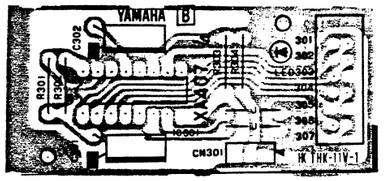

3NA-VA84920-5X ⚠

• FP CIRCUIT BOARD 2/4

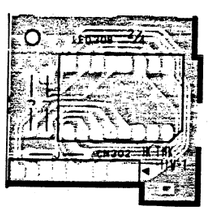

• FP CIRCUIT BOARD 3/4

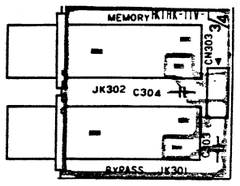

• FP CIRCUIT BOARD 4/4

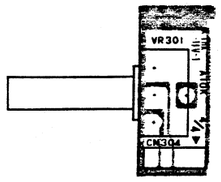

Circuit Board :XA407 B

IC301 :IR2E19

LED301~303 :VA90250 (OR)
LED304~307 :VA90250 (GR)
LED308 :VA02600

VR301 :VA75760

• POWER SUPPLY CIRCUIT BOARD

JAPANESE MODEL (VA81380)

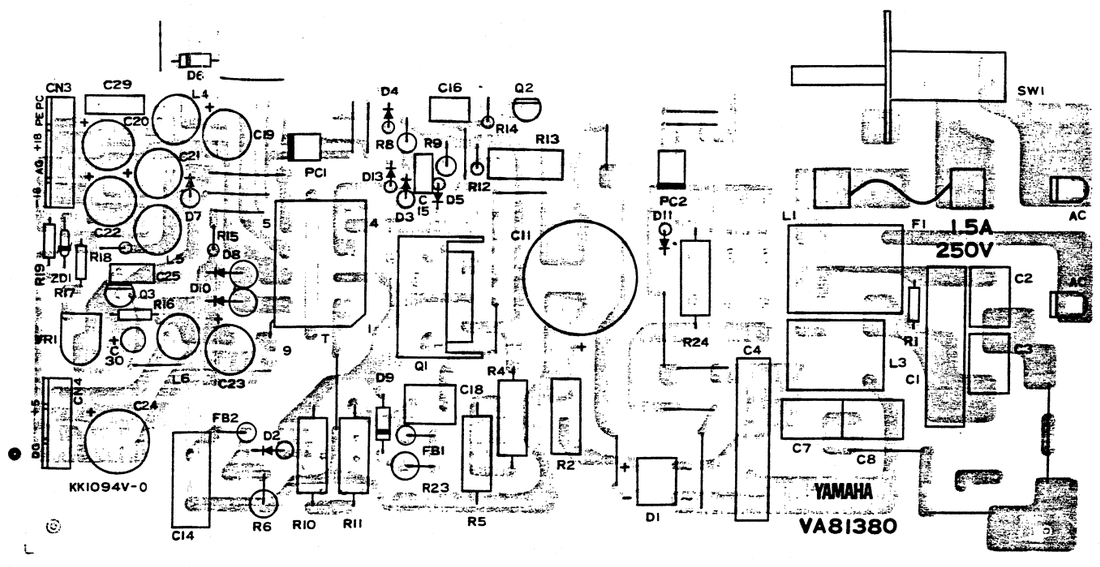

Q1 (J,U,C)	:2SC2555
(H,D,A)	:2SC2792
Q2	:2SD1207
Q3	:2SC2634
D1 (J,U,C)	:DF04M
(H,D,A)	:DF06M
D2,9	:ERB4406
D3	:ERB4302
D4,5,13	:1SS84
D6,7	:15DF2,15DF4
D8,10	:S2K20H
D11 (J,U,C)	:1S1555
D12 (H,D,A)	:DF06M
ZD1	:EQA02-06D
PC1,2 (J,U,C)	:PC-817
(H,D,A)	:PC-511
FB1,2	:Ferrite Bead
F1 (J)	:1.5A 250V
(U,C)	:2.0A 250V
(H,D,A)	:1.25A 250V

AMERICAN MODEL (VA81390)

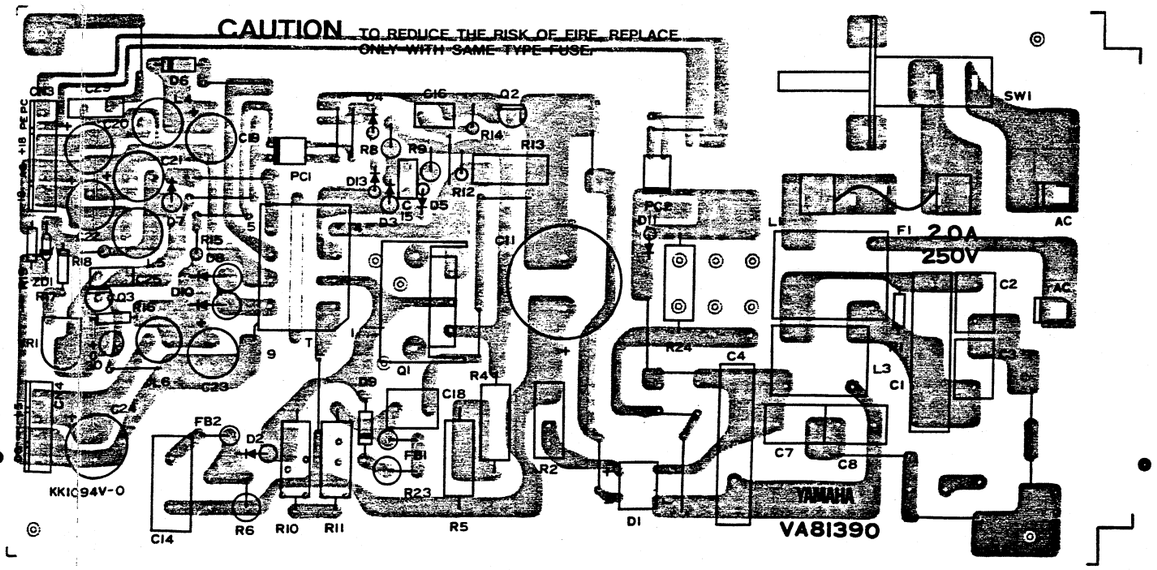

CANADIAN MODEL (VA81400)

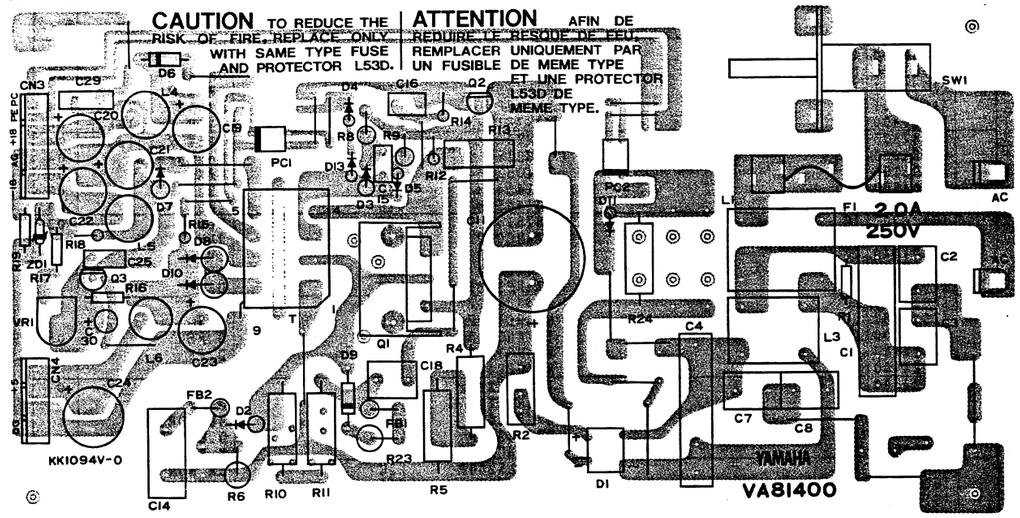

EUROPEAN MODEL (VA81410)

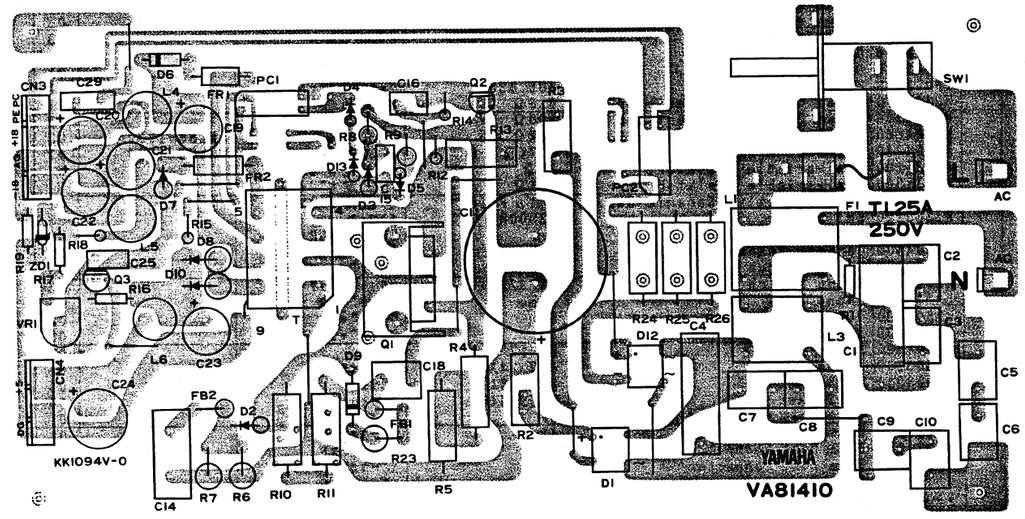

Notes DESTINATION ABBREVIATIONS

J	: Japanese model	A	: Australian model
U	: U.S.A. model	E	: European model
C	: Canadian model	D	: West German model
X	: General model	B	: British model
M	: South African model	I	: Indonesian model
H	: North European model		

PARTS LIST

■Electrical Parts

	Ref	Part No	Description		部品名	Remarks	ランク
*		VA849000	AD Circuit Board		ADｼｰﾄ		
		IG001390	IC	NJM4558DV	IC	OP AMP.	03
*		XA772001	IC	NJM4556	IC	OP AMP.	
		XA013001	IC	M5238P	IC	OP AMP.	04
		IG147400	IC	NJM7815A	IC	+15V Regulator	04
		IG147500	IC	NJM7915A	IC	-15V Regulator	04
		IG134900	IC	IR9311	IC	Comparator	04
		IG055100	IC	TC4053BP	IC	MPX	05
		IG104500	IC	HD14549B	IC	REG	08
		IG104600	IC	HD14559B	IC	REG	08
		IG124300	IC	PST518A	IC	Reset	03
		IR000480	IC	M74HC04P	IC	INV	
		IR001480	IC	M74HC14P	IC	INV	
		IR007480	IC	M74HC74P	IC	DFF	
		IR013880	IC	M74HC138P	IC	DEC	
		IR013980	IC	M74HC139P	IC	DEC	
		IR016380	IC	M74HC163P	IC	CNT	
		IR016600	IC	TC74HC166P	IC	S.REG	05
		IR017480	IC	M74HC174P	IC	D.FF	
		IR024480	IC	M74HC244P	IC	BUS.BUF	
		IR024500	IC	TC74HC245P	IC	BUS.BUF	07
		IR027380	IC	M74HC273P	IC	D.FF	
		IR036780	IC	M74HC367	IC	BUS.DRIV	
		IR037380	IC	M74HC373P	IC	D.LATCH	
		IR059500	IC	TC74HC595	IC	S.REG	06
*		XA379001	IC	HD74LS266P	IC	EX.NOR	03
		IG093500	IC	HD6303RP	IC	8BIT CPU	16
		IG132700	IC	HD6350P	IC	Interface	
		IG122320	IC	M5M4416P-12	IC	64K D-RAM	10
		IG148500	IC	TC5565L-12,15	IC	64K S-RAM	21
*		XA542001	IC	TBP28L22N	IC	256K BP-ROM	08
*		XA519001	IC	DSP V1.0	IC	EP ROM	
		IT380400	IC	YM3804	IC	DSP	17
		IT380700	IC	YM3807	IC	MOD	15
*		XA566001	IC	PCM54HP	IC	DAC	12
		IG127300	Transistor Array	TD62003P	ﾄﾗﾝｼﾞｽﾀｱﾚｲ		04
		IG138700	Transistor Array	TD62506P	ﾄﾗﾝｼﾞｽﾀｱﾚｲ		03
		IZ000200	Transistor Array	2SC1815	ﾄﾗﾝｼﾞｽﾀｱﾚｲ		03
		IK000470	Photo Coupler	TLP552	ﾌｫﾄｶﾌﾟﾗ		06
		IA101520	Transistor	2SA1015(Y)	ﾄﾗﾝｼﾞｽﾀ		03
		IC181520	Transistor	2SC1815(Y)	ﾄﾗﾝｼﾞｽﾀ		03
		VA106500	Diode	1SS176	ﾀﾞｲｵｰﾄﾞ		
		IH000720	Diode	W03B	ﾀﾞｲｵｰﾄﾞ		01
		IF002140	Zener Diode	RD5.6EB2	ﾂｪﾅｰﾀﾞｲｵｰﾄﾞ		01
		HL313680	Metal Oxide Film Resistor	6.8Ω 1W	酸金抵抗		01
		HL315100	Metal Oxide Film Resistor	100Ω 1W	酸金抵抗		01
		HZ004660	Resistor Array	10KΩ×8	抵抗ｱﾚｲ	RMLS8-103J	02
		HZ004740	Resistor Array	4.7KΩ×8	抵抗ｱﾚｲ	RMLS8-472J	01
		VB135200	Semivariable Resistor	3KΩ	半固定ﾎﾞﾘｭｰﾑ		
		VB135500	Semivariable Resistor	30KΩ	半固定ﾎﾞﾘｭｰﾑ		
		FZ004110	Semiconductive Ceramic Cap.	0.1μF 16V	半導体ｾﾗｺﾝ		01
		FI363220	EMI Filter	22000P	ｴﾐﾌｨﾙ		02
		VA024200	Filter		LCﾌｨﾙﾀｰLP		07
		QU004800	Ceramic Resonetor (crystal)	4MHz	ｾﾗﾐｯｸ振動子		03
		KA401270	Slide Switch	SSS212	ｽﾗｲﾄﾞｽｲｯﾁ		03
		KA401280	Slide Switch	SSP32204	ｽﾗｲﾄﾞｽｲｯﾁ		03
		LB301800	Phone Jack	Mono	ﾎｰﾝｼﾞｬｯｸ		03
		LB500590	DIN Jack	5P	DINｼﾞｬｯｸ		02
		LB605820	DIN Jack	8P	DINｼﾞｬｯｸ		03
		KC001300	Relay	RZ-12	ﾘﾚｰ		07
		LB603900	IC Socket	DL2-24A	ICｿｹｯﾄ		05
		LB606050	IC Socket	DL2-28A	ICｿｹｯﾄ		05
*		VA024500	IC Socket	DICS-64AS	ICｿｹｯﾄ		08
		VA030300	Base Post Connector	3P	ﾍﾞｰｽﾎﾟｽﾄ		01
		VA030400	Base Post Connector	4P	ﾍﾞｰｽﾎﾟｽﾄ		01
		VA030600	Base Post Connector	6P	ﾍﾞｰｽﾎﾟｽﾄ		01
		VA030800	Base Post Connector	8P	ﾍﾞｰｽﾎﾟｽﾄ		01
		VA030900	Base Post Connector	9P	ﾍﾞｰｽﾎﾟｽﾄ		01
		VA031200	Base Post Connector	12P	ﾍﾞｰｽﾎﾟｽﾄ		01
		VA882100	Header	14P	ﾍｯﾀﾞｰ		02
		IL000690	Sheet		放熱ｼｰﾄ		01
		AA834370	DIN Socket Holder		DINｿｹｯﾄﾎﾙﾀﾞｰ		
		BB807110	Ground Plate		ｱｰｽ金具		
		BB068370	Ground Plate		ｱｰｽ金具		
		EB326056	Flat Head Screw	2.6×5 FCM3-BL	皿小ﾈｼﾞ	PACK	
		EB330106	Flat Head Screw	3×10 FCM3-BL	皿小ﾈｼﾞ	PACK	01
		EV103300	Hexagonal Nut	φ3 ZMC2-BL	六角ﾅｯﾄ	PACK	01
		EV303306	Spring Lock Washer	φ3 FCM3-BL	ﾊﾞﾈ座金	PACK	01

＊：New Parts (新規部品)　NR　　ランク：Japan Only

	Ref	Part No	Description		部品名	Remarks	ランク
*		VA849100	KY Circuit Board		KYシート		
*		VA262300	LED(Red)	LN242RP	LED		01
		KA906530	Push Switch	EVQ-Q8R13K	ﾌﾟｯｼｭｽｲｯﾁ		02
*		VA314300	Switch Escutcheon		ｽｲｯﾁｴｽｶｯｼｮﾝ		01
*		VA314400	Switch Escutcheon		ｽｲｯﾁｴｽｶｯｼｮﾝ		01
*		VA849200	FP Circuit Board		FPシート		
		IG136600	IC	IR2E19	IC	LED DRIV	05
		VA026000	LED Display	LN524RKS	LEDﾃﾞｨｽﾌﾟﾚｲ		05
*		VA902500	LED Display	SX-25K	LEDﾃﾞｨｽﾌﾟﾚｲ		06
*		VA757600	Rotary Potentiometer	A10KΩ	ﾛｰﾀﾘｰﾎﾞﾘｭｰﾑ		
		FZ004110	Semiconductive Ceramic Cap.	0.1μF 16V	半導体ｾﾗｺﾝ		01
		LB301800	Phone Jack	Mono	ﾎｰﾝｼﾞｬｯｸ		03
*		VA813800	Power Supply Unit		電源ユニット	J	
*		VA813900	Power Supply Unit		電源ユニット	U	
*		VA814000	Power Supply Unit		電源ユニット	C	
*		VA814100	Power Supply Unit		電源ユニット	HDA	
		IC255500	Transistor	2SC2555	ﾄﾗﾝｼﾞｽﾀ	JUC	05
		IC279200	Transistor	2SC2792	ﾄﾗﾝｼﾞｽﾀ	HDA	07
		IX801370	Transistor	2SD1207	ﾄﾗﾝｼﾞｽﾀ		
		IC263400	Transistor	2SC2634(R,S,T)	ﾄﾗﾝｼﾞｽﾀ		03
		IX801380	Diode	DF04M	ﾀﾞｲｵｰﾄﾞ	JUC	03
		IX801390	Diode	DF06M	ﾀﾞｲｵｰﾄﾞ	HDA	03
		IH001740	Diode	ERB4406	ﾀﾞｲｵｰﾄﾞ		01
		IX551600	Diode	ERB4302	ﾀﾞｲｵｰﾄﾞ		02
		IF001380	Diode	1SS84	ﾀﾞｲｵｰﾄﾞ		01
		IX551590	Diode	15DF2	ﾀﾞｲｵｰﾄﾞ		03
		IX801400	Diode	S2K20H	ﾀﾞｲｵｰﾄﾞ		03
		IF000040	Diode	1S1555	ﾀﾞｲｵｰﾄﾞ	JUC	01
		IF001470	Zener Diode	RD6.2EB2	ﾂｪﾅｰﾀﾞｲｵｰﾄﾞ		01
		IK000480	Photo Coupler	PC-817	ﾌｫﾄｶﾌﾟﾗ	JUC	03
		IK000490	Photo Coupler	PC-511	ﾌｫﾄｶﾌﾟﾗ	HDA	05
		HT570540	Trimmer Potentiometer	B1KΩ	ｿﾘｯﾄﾞﾎﾞﾘｭｰﾑ		02
		GX800100	Choke Coil	20MH	ﾁｮｰｸｺｲﾙ		06
		GX800190	Choke Coil	8MH	ﾁｮｰｸｺｲﾙ		04
		XX804230	Choke Coil	150μH	ﾁｮｰｸｺｲﾙ		02
		GX800180	Choke Coil	20μH	ﾁｮｰｸｺｲﾙ		02
		GX800160	Power Transformer	TYA010	電源ﾄﾗﾝｽ	JUC	08
		GX800170	Power Transformer	TYA011	電源ﾄﾗﾝｽ	HDA	08
		FZ003440	Electrolytic Cap.	1000μF 10V	ｹﾐｺﾝ		02
		UJ129220	Electrolytic Cap.	2200μF 10V	ｹﾐｺﾝ		02
		KA803610	Power Switch		ﾊﾟﾜｰｽｲｯﾁ		03
*		VA803700	Switch Panel		ｽｲｯﾁﾊﾟﾈﾙ		
		EA230066	Pan Head Screw	3×6	ﾅﾍﾞ小ﾈｼﾞ		
		EA230106	Pan Head Screw	3×10	ﾅﾍﾞ小ﾈｼﾞ		01
		EV120300	Hexagonal Nut	M3	六角ﾅｯﾄ		01
		EB000340	Fuse	1.5A 250V	ﾋｭｰｽﾞ	J	01
		KB000350	Fuse	2.0A 250V	ﾋｭｰｽﾞ	UC	01
		KB000680	Fuse	1.25A 250V	ﾋｭｰｽﾞ	HDA	02
		BX800040	Ferrite Bead		ﾌｪﾗｲﾄﾋﾞｰｽﾞ		02

＊：New Parts（新規部品）　NR

ランク：Japan Only

■Overall Assembly

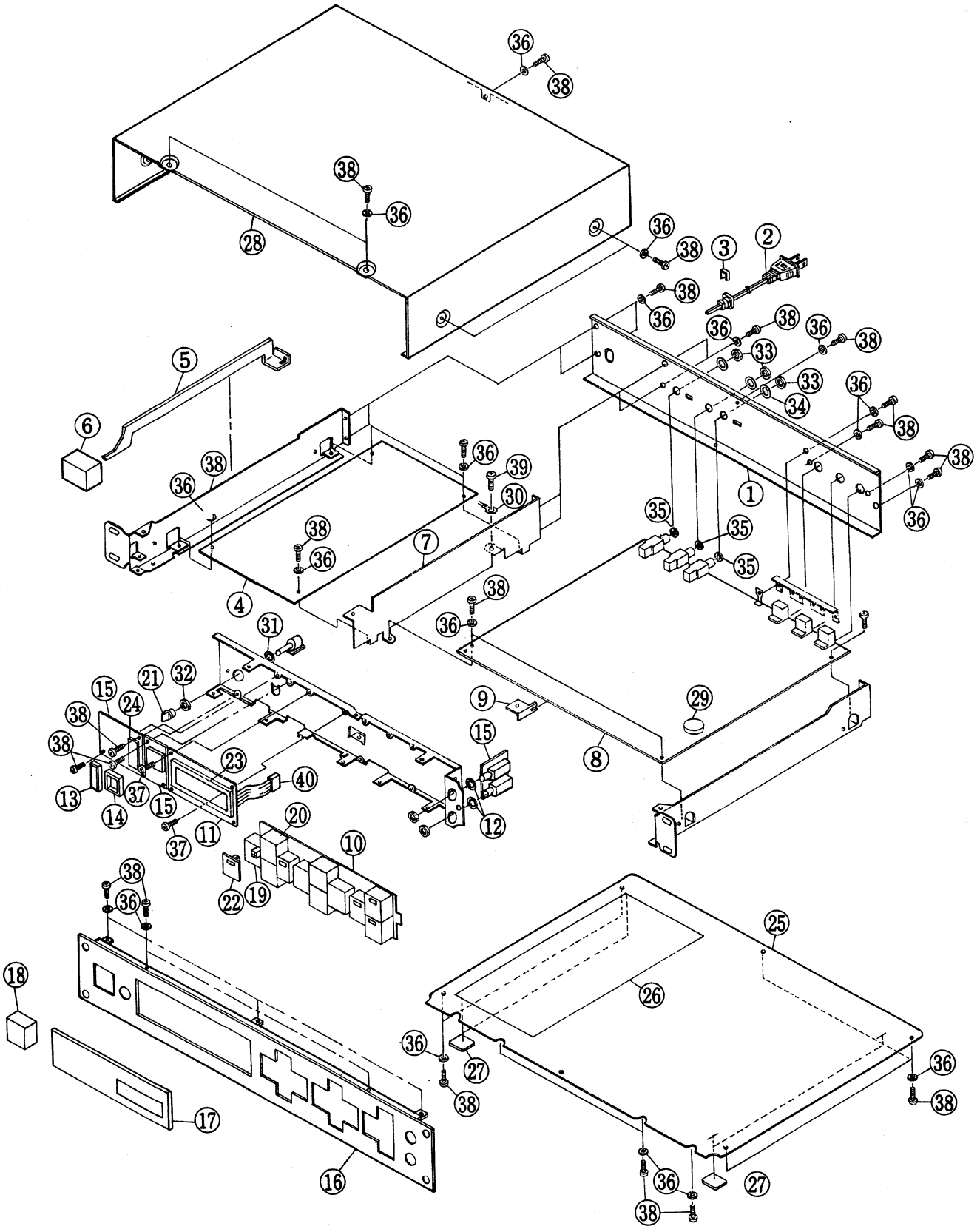

1

A B C D E F

1 2 3 4 5 6 7

AD

Head Amp

INPUT LEVEL

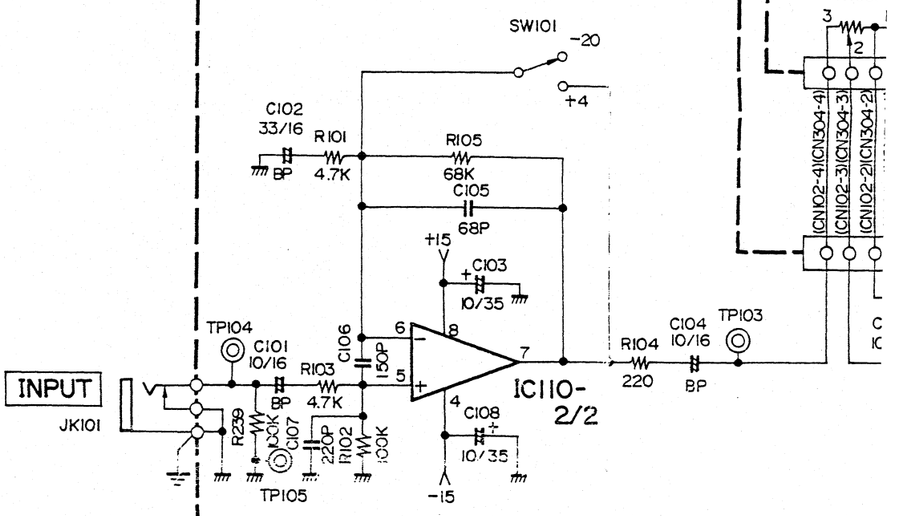

D/A Converter

Serial - Parallel Converter (Shift Register)

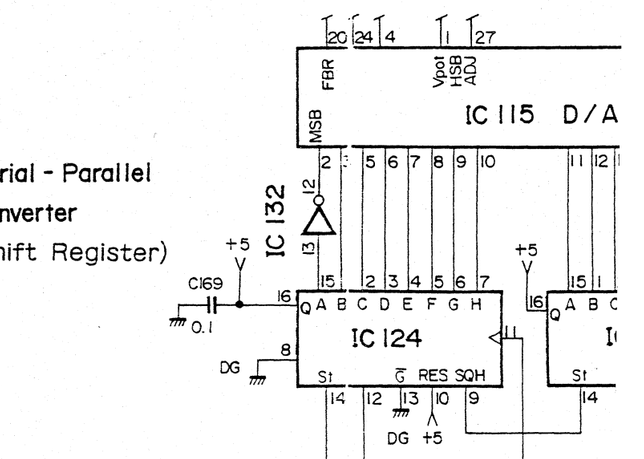

SPX90 SCHEMATIC DIAGRAM (ANALO

G H I J K L

FP 4/4

INPUT VOL.

VR301 A10K

(CN102-4)(CN304-4)
(CN102-3)(CN304-3)
(CN102-2)(CN304-2)
(CN102-1)(CN304-1)

TP101

TP102

C146 10/16 BP

R188 47K

R189 1K

IC110-2/2

+15 C144 10/35

-15 C143 10/35

R187 220

IC110-2/2 Buffer

Low Pass Filter

LPF 101

R170 5.6K

R174 5.6K

R171 18K

VR101 830K

R175 3.9K

IC111 1/2

C145 10/16 BP

A/D Gain

R172 4.3K

C147 0.0036

R173 10K

R193 5.1K

IC111 2/2

Emphasis

R191 10K

R192 5.1K

R190 220

Sample / Hold

IC112

C148 0.1

R176 4.7K

R177 2.4K

+15

R196 5.1K

C154 330P

R178 2.7K

C153 330P

R194 4.7K

-15

R195 2.4K

C151 0.1

D116 D115 ISS176 x 2

D117 D118 ISS176 x 2

C143 0.1

C156 0.1

A/D Converter

MSB COM

C142 0.1

C140 0.1

Vcc COM VO SUM OFF SET LSB

R154 2.2K

VR102 B 2K

115 D/A

IC123

+5 DG

MCLK DACK MCLK

Amp

C109 150P

R129 18K

R128 10K

R130 1K

IC101-1/2

R132 220

C203 10/16 BP

R131 100K

TP106

ADEN

Parallel - Serial Converter (Shift Register)

IC132

Vdd S1 CK2 CLR LD QH

IC135

DG

Successive Approximation Register

Vcc GND MR SC

C171 0.1

ADLD MCLK ADST

Sample / Hold

TP109

R150 10K C131 0.1

R153 4.7K R152 2.4K

C129 220P

C130 0.1

R157 10K

IC108-1/2

R151 5.1K

C136 0.1

IC107-2/2

R149 5.6K

Low Pass Filter

LPF103

R141 5.6K

De - emphasis

R126 6.2K C119 0.0024

R125 15K

R127 3.9K

IC104-2/2

R122 5.6K

Aperture Correction

C115 10/35

C117 0.0068

R123 5.6K

R124 5.6K

C118 470P

C116 10/35

C114 33/16 BP

R121

IC103-2

RY102 BPS ON

D102

SCHEMATIC DIAGRAM (ANALOG SECTION)

I	J	K	L	M	N

A/D Gain

Emphasis

Sample / Hold

Buffer

Comparator

VR101 B30K

R171 18K

R174 5.6K

R175 3.9K

C145 10/16

IC111 1/2

R172 4.3K

C147 0.0036

R173 10K

R191 10K

R193 5.1K

IC111 2/2

R190 220

R192 5.1K

C148 0.1

R176 4.7K

R177 2.4K

+15

R196 5.1K

IC112

C154 330P (P)

C153 330P (P)

C155 0.1

R178 2.7K

R194 4.7K

R195 2.4K

C151 0.1

-15

IC113-1/2

C204 0.1

R182 10K

R184 10K

R186 5.1K

IC113-2/2

TP108

D107 D108 IS3176 x2

R165 27K

R167 2.2K

R166 2.2K

C138 0.1

IC109

Q106

R183 7.5K

R164 68K

R163 560

C141 0.1

TP107

R160

D116 D115 IS3176 x2

D117 D118 IS3176 x2

C143 0.1

C156 0.1

A/D OFFSET

VR103 B30K

R185 330K

A/D Converter

IC 114 A/D

COM Vcc MSB ADJ Vref VB FBR JUH OFF SET MSB LSB

D113 D112 D111 D114 D110 D109

R181 22K

R243 3.3K

R169 3.3K

A/D Speed-Up

Q105

R179 3.3K

R168 22K

R180 33K

Parallel - Serial Converter (Shift Register)

IC 132

IC 135

Vdd S1 CK2 CLR LD QH DG A B C D E F G H

Successive Approximation Register

IC 126

Q0 Vcc GND MR SC C D EOC

IC 125

SC MR C D Q0 Vcc GND

C171 0.1

C170 0.1

Parallel-Serial Converter (Shift Register)

IC 134

Vdd SA CK1 CLR LD QH DG A B C D E F G H

TP106

C203 10/16

R132 220

R131 100K

1/2

ADEN ADLD MCLK ADST ADCK ADST ADCK MCLK ADOUT ADLD ADCK

TP109

Low Pass Filter

De - emphasis

Aperture Correction

Buffer Amp

LPF103

IC107-2/2

R149 5.6K

R141 5.6K

R126 6.2K

C119 0.0024

R125 15K

R127 3.9K

IC 104-2/2

C117 0.0068

R122 5.6K

R123 5.6K

R124 5.6K

C118 4700P (P)

C115 10/35

C116 10/35

IC103-2/2

TP111

C114 33/16

BP

R121 100K

OFF ON

R109 100

+4 -20

R110 15K

R111 2.2K

R116 10K

R115 18K

C112 10/35

C113 10/35

R117 10K

IC102-2/2

R107 120

C110 100/16

BP

R106 100K

OFF ON

FP 1/4 LED Driver

+15
C152 0.1
(CN103-1) (CN301-1)
(CN103-2) (CN301-2)
(CN103-3) (CN301-3)
R304 33K
R303 4.7K
IC 301
R302 10K
R301 10K
C301 10/35
C302 10/35
LED 301 — 10
LED 302 — -3
LED 303 — -6
LED 304 — -10
LED 305 — -15
LED 306 — -20
LED 307 — -30

IC 301 : IR2E19

+5
R160 1K
IC109
R169 3.3K
A/D Speed-Up
Q105
ADCK

TP113
R 100K
OFF
ON
V
JK102
FG
L

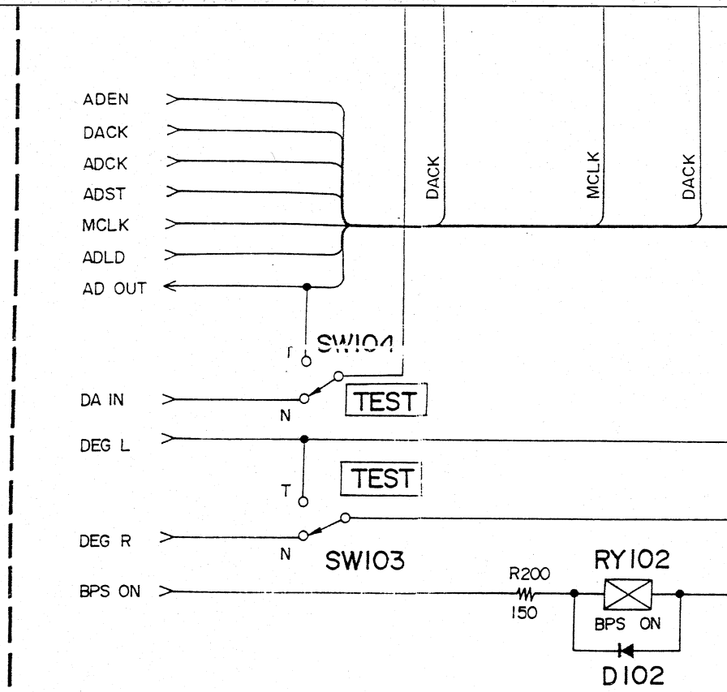

	※F
JAPANESE	1.5A 250V
U.S. CANADIAN	2A 250V
GENERAL and W. GERMAN	T1.25A 250V

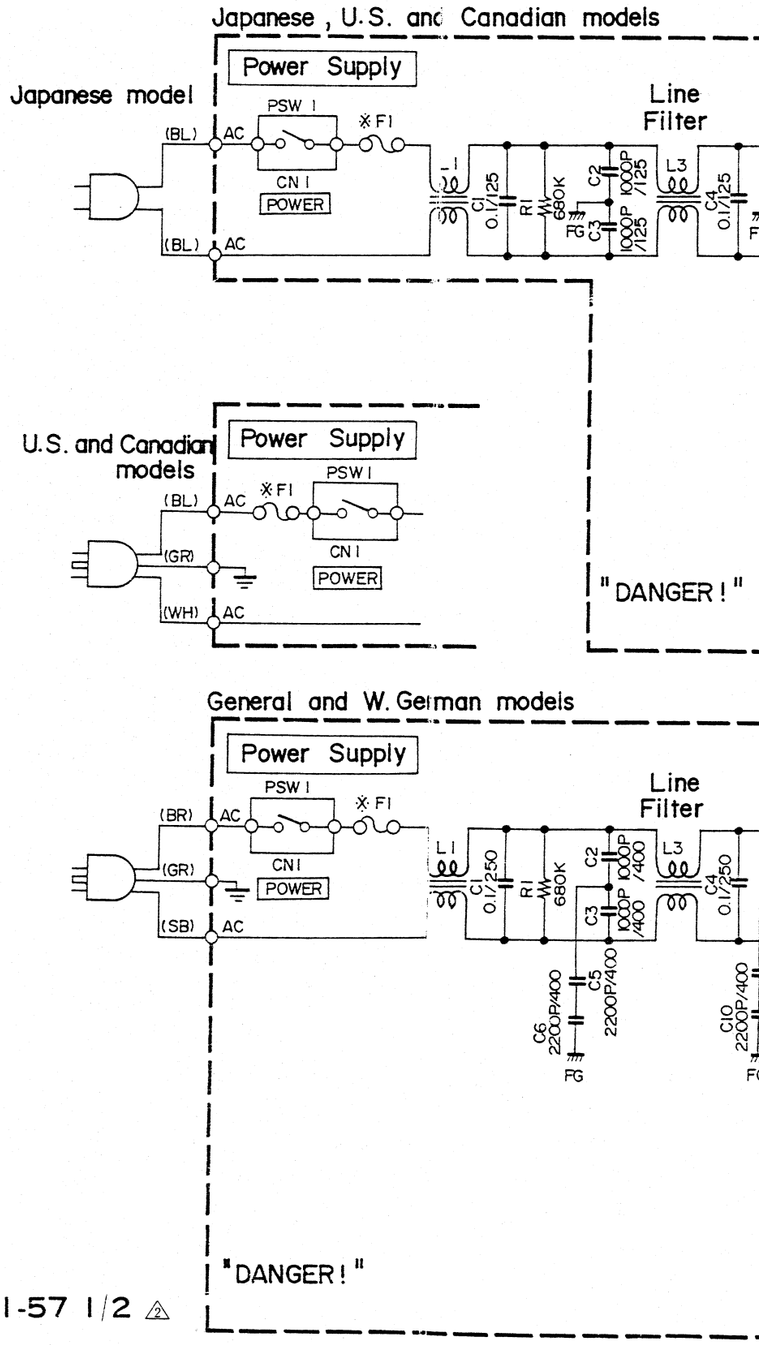

IC101, 103, 104, 110, 111 : NJM4558DV (iG001390)
IC102 : NJM4556D (iG042500)
IC105, 106 : NJM7915A (iG147500)
IC107, 113 : M5238P (XA013001)
IC108, 112 : TC4053BP (iG055100)
IC109 : IR9311 (iG134900)
IC114, 115 : PCM54HP (XA566001)
IC123, 124 : TC74H595P (iR059500)
IC125, 126 : HD14549B (iG104500)
IC134, 135 : TC74HC166P (iR016600)
IC132 : TC74HC04P (iR000400)

Q101, 103, 105 : 2SC1815 (Y)
Q102, 104 : 2SA1015 (Y)
Q106 : 2SC1815 (TWIN)

D101 ~ 104, 107 ~ 118 : 1SS176
D105, 106 : W03B
ZD101, 102 : RD5.6EB2 5.6V
RY101, 102 : DCRZ-12
SW102 : SSP32204
SW103, 104 : SSS214

KEC-91141-57 1/2 ⚠2

IC101-1/2

DACK MCLK DACK MCLK ADEN

SW104 TEST

SW103 TEST

R200 150 RY102 BPS ON D102

Sample / Hold

R150 10K C131 0.1 TP109

R153 4.7K R152 2.4K C129 220P +15 C130 0.1

R157 10K

IC108-1/2

R151 5.1K C136 0.1 -15

IC107-2/2

R149 5.6K

Low Pass Filter

LPF103

R141 5.6K

R126 6.2K C119 0.002 R125 15K

R127 3.9K

IC104-2/2

R159 10K C202 0.1 TP110

R162 4.7K R161 2.4K C137 220P

R156 10K

IC108-2/2

R158 5.1K

IC107-1/2

R155 5.6K

LPF102

R140 5.6K

R138 6.2K C123 0.002 R137 15K

R139 3.9K

IC104-1/2

	※F
PANESE	1.5A 250V
S. CANADIAN	2A 250V
NERAL and W. GERMAN	T1.25A 250V

Japanese , U.S. and Canadian models

Power Supply

PSW1 ※F1 CN1 POWER

AC AC

Line Filter

L1 C1 0.1/250 R1 680K C2 1000P/125 C3 1000P/125 FG L3 C4 0.1/250 C7 1000P/125 C8 1000P/125 FG

R24 100K (2W) D11 PC2

DI R2 6.8 (5W) C11 150/200

Switching Regulater

T1 D6 D7 D8 D10 D4 D13 D3 D2 D9 D5 PC1

R4 33K (2W) R5 33K (2W) R6 33K (2W) C14 0.01 FB2 /250

C15 0.015/50 R8 27 (1W) R10 150 (2W) FB1

R9 22 (1W) R12 R11 150 (2W) R23 22 (2W) R14 330

R13 (3W) C18 470P/250 C16 0.1/50

C19 470/25 C20 330/25 C21 470/25 L5 C22 330/25 C29 0.01/50

L4 150μH L6 20μH C23 1000/10 C24 2200/10 R19 10

Q2 Q1

R15 100 R16 1.5K PC1 C25 0.1/50

Q3 Comparator VR1 B1K R17 1.8K R18 1.5K

ZD1 C3 22/10

CN5-8 PC CN5-7 PE CN5-6+18 CN5-5+18 CN5-4 AG CN5-3 AG CN5-2-18 CN5-1-18 CN4-6+5 CN4-5+5 CN4-4+5 CN4-3 DG CN4-2 DG CN4-1 DG

"DANGER!"

Power Supply

PSW1 ※F1 CN1 POWER

AC AC

General and W. German models

Power Supply

PSW1 ※F1 CN1 POWER

AC AC

Line Filter

L1 C1 0.1/250 R1 680K C2 1000P/400 C3 1000P/400 L3 C4 0.1/250 C7 1000P/400 C8 1000P/400

C6 2200P/400 C5 2200P/400 FG C10 2200P/400 C9 2200P/400 R24 100K (2W) R25 100K (2W) R26 100K (2W) FG

DI2 DI PC2

R3 6.8 (3W) R2 6.8 (3W)

Switching Regulator

T1 D6 D7 D8 D10 D4 D13 D3 D2 D9 D5 PC1

R4 68K (2W) R5 68K (2W) R7 120K (2W) C14 0.01 FB2 /250

C15 0.015/50 R6 120K (2W) R8 27 (1W) R10 330 (2W) FB1

R9 22 (1W) R12 R11 330 (2W) R23 22 (2W) R14 150

R13 1.5 (3W) C18 220P/250 C16 0.01/50

C19 470/25 C20 330/25 C21 470/25 L5 C22 330/25 C29 0.01/50

L4 150μH L6 20μH C23 1000/10 C24 2200/10 R19 10

Q2 Q1

R15 47 R16 1.5K PC1 C25 0.1/50

Q3 Comparator VR1 B1K R17 1.8K R18 1.5K

ZD1

CN5-8 PC CN5-7 PE CN5-6+18 CN5-5+18 CN5-4 AG CN5-3 AG CN5-2-18 CN5-1-18 CN4-6+5 CN4-5+5 CN4-4+5 CN4-3 DG CN4-2 DG CN4-1 DG

"DANGER!"

E F G H I J

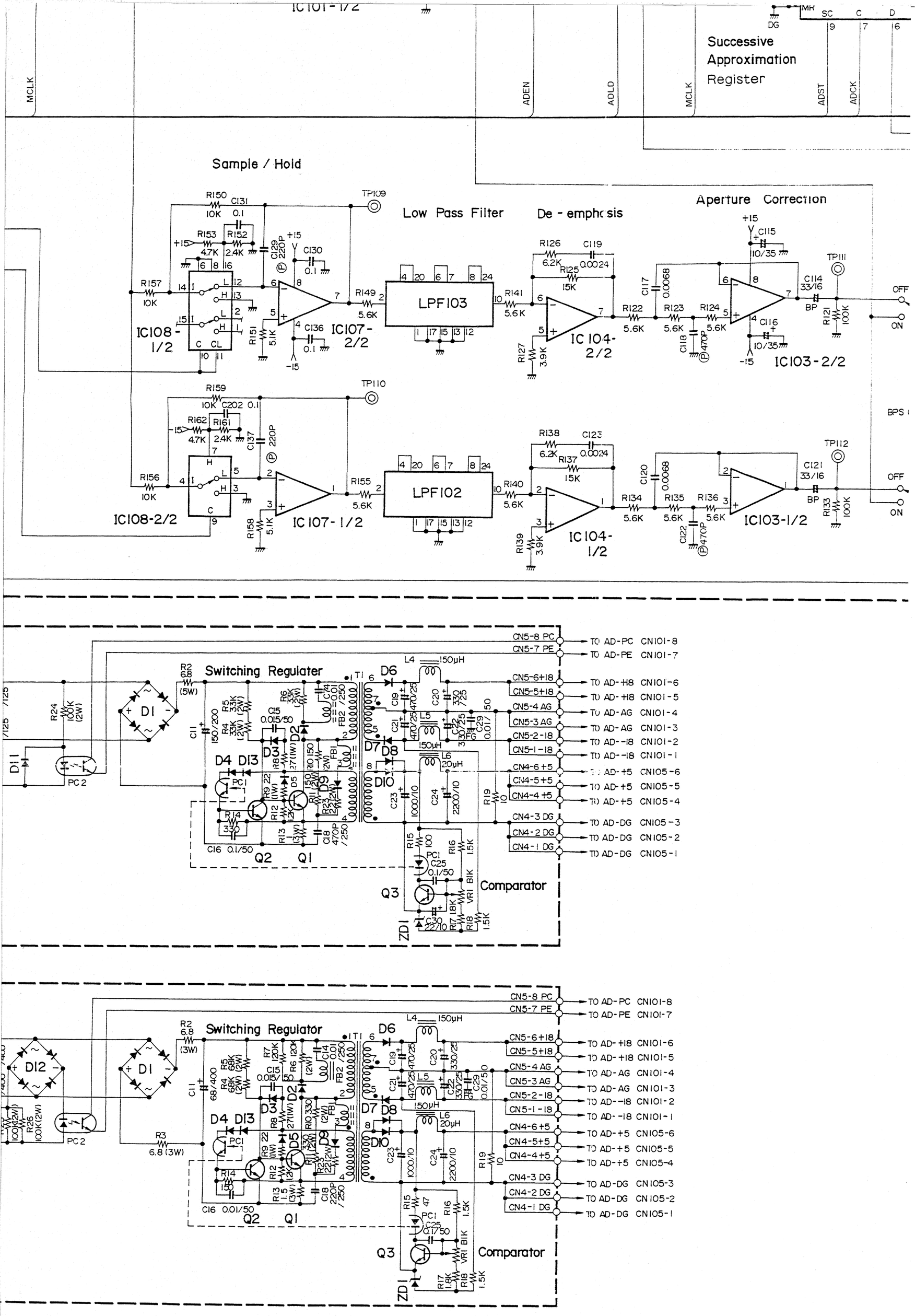

IC101-1/2
Successive Approximation Register
MCLK
ADEN
ADLD
MCLK
ADST
ADCK
Sample / Hold
Low Pass Filter
De - emphasis
Aperture Correction
IC108-1/2
IC107-2/2
LPF103
IC104-2/2
IC103-2/2
IC108-2/2
IC107-1/2
LPF102
IC104-1/2
IC103-1/2
TP109
TP110
TP111
TP112
OFF
ON
BPS
Switching Regulater
Comparator
CN5-8 PC
CN5-7 PE
CN5-6+18
CN5-5+18
CN5-4 AG
CN5-3 AG
CN5-2-18
CN5-1-18
CN4-6+5
CN4-5+5
CN4-4+5
CN4-3 DG
CN4-2 DG
CN4-1 DG
TO AD-PC CN101-8
TO AD-PE CN101-7
TO AD-+18 CN101-6
TO AD-+18 CN101-5
TO AD-AG CN101-4
TO AD-AG CN101-3
TO AD-−18 CN101-2
TO AD-−18 CN101-1
TO AD-+5 CN105-6
TO AD-+5 CN105-5
TO AD-+5 CN105-4
TO AD-DG CN105-3
TO AD-DG CN105-2
TO AD-DG CN105-1

DG 9 7 6 10 7 6 DG

Successive Approximation Register

ADEN ADLD MCLK ADST ADCK ADST ADCK MCLK ADOUT ADLD ADCK

Low Pass Filter

LPF103

LPF102

De - emphasis

IC104-2/2

IC104-1/2

Aperture Correction

IC103-2/2

IC103-1/2

Buffer Amp

IC102-2/2

IC102-1/2

OUTPUT LEVEL

SW102

BPS ON

MUTE

Comparator

IC105

IC106

RY101

ZD101

ZD1

TO AD-PC CN101-8
TO AD-PE CN101-7
TO AD-+18 CN101-6
TO AD-+18 CN101-5
TO AD-AG CN101-4
TO AD-AG CN101-3
TO AD--18 CN101-2
TO AD--18 CN101-1
TO AD-+5 CN105-6
TO AD-+5 CN105-5
TO AD-+5 CN105-4
TO AD-DG CN105-3
TO AD-DG CN105-2
TO AD-DG CN105-1

J K L M N O

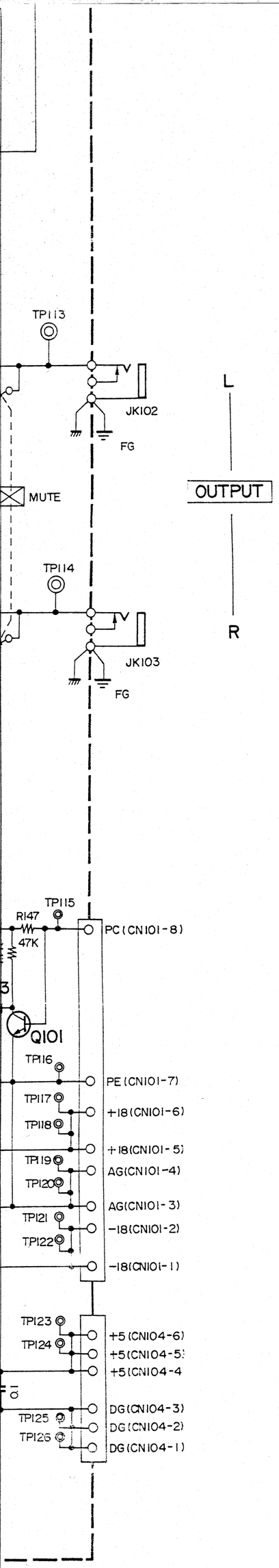
TP113
JK102
FG
MUTE
TP114
JK103
FG
L
OUTPUT
R
TP115
R147
47K
PC(CN101-8)
Q101
TP116
PE(CN101-7)
TP117
TP118
+18(CN101-6)
+18(CN101-5)
TP119
TP120
AG(CN101-4)
AG(CN101-3)
TP121
TP122
-18(CN101-2)
-18(CN101-1)
TP123
TP124
+5(CN104-6)
+5(CN104-5)
+5(CN104-4
TP125
TP126
DG(CN104-3)
DG(CN104-2)
DG(CN104-1)

7

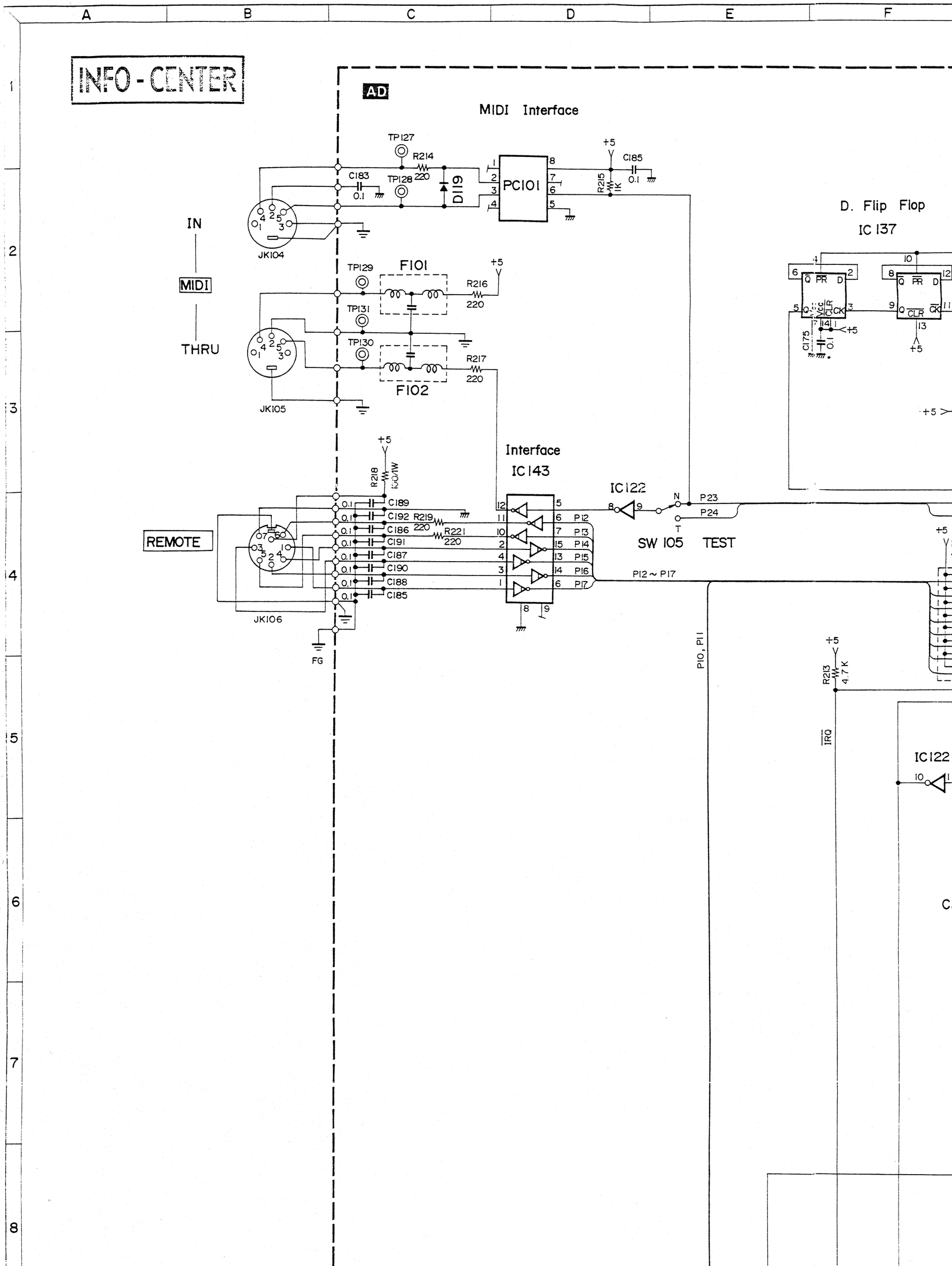

INFO - CENTER
AD
MIDI Interface
TP127
R214
220
C183
0.1
TP128
D119
PC101
+5
C185
0.1
R215
1K
IN
MIDI
THRU
JK104
TP129
F101
R216
220
TP131
TP130
R217
220
F102
JK105
D. Flip Flop
IC 137
C175
0.1
Interface
IC143
R218
100/1W
C189
C192
R219
220
C186
R221
220
C191
C187
C190
C188
C185
REMOTE
JK106
FG
IC122
P23
P24
SW 105
TEST
P12
P13
P14
P15
P16
P17
P12 ~ P17
P10, P11
R213
4.7 K
IRQ
IC122

SPX90 SCHEMATIC DIAGRAM (DIGITAL

G | H | I | J | K | L

Memory Back up

Reset

Q108 TP135 TP177 D120 B101 3V

+5 R232 22K IC142 R233 47 C197 10/35 IC153 R231 2.2K R234 47K R235 15K R236 10K R237 10K Q107 TP 134

RESET

Flop

RESET

PR D CLR CK E

+5

CPU IC 150

RES E AS R/W DO/A0 D1/A1 D2/A2 D3/A3 D4/A4 D5/A5 D6/A6 D7/A7

Vss XTAL NMI STABY P20 P21 P22 P23 P24 P10 P11 P12 P13 P14 P15 P16 P17 IRQ1 EXTAL

R223 4.7K x2 R220 IC153 E R/W OE

MR109 4.7K x8 MR108 4.7K x8 C201 0.1

DATA BUS

DO ~ D7

E, R/W

AO ~ A7

A8 ~ A15

AO, A12 ~ A15

D. Latch

IC 145

AS

ADDRESS BUS

Clock

IC122 R198 1M R199 1K X101 XTAL 4MHz C166 33P C165 33P

IC 151 ROM

A0 ~ A14 D0 ~ D7 OE CE Vpp Vcc Vss MR107 4.7K x8 C195 0.1

8000 ~ FFFF

TP136

IC 144

2G 1G 1A 1B 1Y0 1Y1 1Y2 1Y3 2A 2B 2Y0 2Y1 2Y2 2Y3 Vss Vcc

IC153

IC 146

G2B G2A G1 Y0 Y1 Y2 Y3 Y4 Y5 Y6 Y7 Vss Vcc C198 0.1

2002 2004 2002 2004

2000~3FFF

R/W OE CS1 CS2 WE Vcc C196 10/16

IC 152 RAM

NC Vss

4000 ~ 5FFF

6000 ~ 7FFF

AO ~ A12

AO

XLOK (500KHz)

Modulation Data Generator

E R/W

RXCLK TXCLK XCLK IC

O SCHEMATIC DIAGRAM (DIGITAL SECTION)

I	J	K	L	M	N

Memory
Back up

Reset

LCD Buffer

Q108 TP135 TP177 D120 B101 3V R231 2.2K R233 47 C197 10/35 IC153 R234 47K R235 15K R236 10K R237 Q107 TP134 RESET

IC 141 MR106 10K x 8 C179 0.1 D7 D6 D5 D4 D3 D2 D1 D0 G DIR DC 7 DC 6 DC 5 DC 4 DC 3 DC 2 DC 1 DC 0

IC 122 6000~7FFF R/W A0

IC 151 ROM MR107 4.7K x 8 C195 0.1 8000~FFFF

IC 152 RAM C196 10/16 4000~5FFF

LED Driver

IC 147 IC 148 R230 R229 R228 R227 R226 R225 R224 100 x 7

6000~7FFF

IC 140 C178 0.1 2004 RESET

IC 139 10K x 3 0.01 x 3 R205 R204 R203 R207 R238 10K x 2

Key IN Buffer

IC 144 IC153 2000~3FFF A0~A15 A0~A12

IC 146 2002 2004

IC 154 C199 0.1 MR110 10K x 8 DB0 DB1 DB2 DB5 DB6 DB7

IC 155 C200 0.1 MR111 10K x 8 DC0 DC1 DC2 DC3 DC4 DC5 DC6 DC7

C198 0.1

XLOK (500KHz)

Modulation
Data Generator

O P Q R S T

LCD Unit

+5
R197 6.8/1W
TP144
TP143
(CN105-1) 1 LCD(G)
(CN105-2) (CN105-3) 2 LED(+)

TP145 DC7 (CN106-14) 14 DB7
TP146 DC6 (CN106-13) 13 DB6
TP147 DC5 (CN106-12) 12 DB5
TP148 DC4 (CN106-11) 11 DB4
TP149 DC3 (CN106-10) 10 DB3
TP150 DC2 (CN106-9) 9 DB2
TP151 DC1 (CN106-8) 8 DB1
TP178 DC0 (CN106-7) 7 DB0
TP137 (CN106-6) 6 E
TP138 (CN106-5) 5 R/W
TP139 (CN106-4) -4 RS
TP141 (CN106-3) 3 Vo
TP140 (CN106-2) 2 Vcc
+5 R202 4.7K R201 270 TP142 (CN106-1) 1 Vss

LCD

FP 2/4

LED308

TP162 #2 (CN107-1)(CN302-1) #2
TP163 #1 (CN107-2)(CN302-2) #1
TP155 DA0 (CN107-9)(CN302-9) DA0
TP156 DA1 (CN107-8)(CN302-8) DA1
TP157 DA2 (CN107-7)(CN302-7) DA2
TP158 DA3 (CN107-6)(CN302-6) DA3
TP159 DA4 (CN107-5)(CN302-5) DA4
TP160 DA5 (CN107-4)(CN302-4) DA5
TP161 DA6 (CN107-3)(CN302-3) DA6

LED308 : LN524RKS

R230 DA0
R229 DA1
R228 DA2
R227 DA3
R226 DA4
R225 DA5
R224 DA6
100x7

+5
0Kx3
R205 0.01x3 C180 # 1
R204 C182 # 2
R203 C181 # 3
BPS ON
DB0
R207 DB1
R238 DB2
0Kx2
+5

FP 3/4

TP152
DB0 (CN110-1) (CN303-1)
DB2 (CN110-2) (CN303-2)
TP154
DB1 (CN110-3) (CN303-3)
C304 .01 JK302 MEMORY INC/DEC
C303 .01 JK301 BYPASS

ffer

KY

TP176 #3 (CN109-1)(CN401-1) #3
DA1 (CN109-3)(CN401-3) DA1 LED405 FOOT
DA2 (CN109-2)(CN401-2) DA2 LED404 BYPASS
DA3 (CN109-4)(CN401-4) DA3 LED403 UTILITY
DA4 (CN109-5)(CN401-5) DA4 LED402 BALANCE
DA5 (CN109-6)(CN401-6) DA5 LED401 PARAMETER

SW401~410 : EVQ-Q8RI3K
LED401~405 : LN242RP

TP166 DB7 (CN108-4)(CN401-4) DB7
TP175 DB6 (CN108-3)(CN401-3) DB6
TP165 DB5 (CN108-2)(CN401-2) DB5
TP167 DC0 (CN108-6)(CN401-6) DC0
TP168 DC1 (CN108-5)(CN401-5) DC1
TP169 DC2 (CN108-7)(CN401-7) DC2
TP170 DC3 (CN108-8)(CN401-8) DC3
TP171 DC4 (CN108-9)(CN401-9) DC4
TP172 DC5 (CN108-10)(CN401-10) DC5
TP173 DC6 (CN108-11)(CN401-11) DC6
TP174 DC7 (CN108-12)(CN401-12) DC7
TP164 (CN108-1)(CN401-1)

DB7 DB6 DB5 SW409 SW411 SW410
UTILITY FOOT TRIGGER BYPASS
DC3 DC2 DC1 DC0 SW405 SW406 SW407 SW408
STORE RECALL
DC7 DC6 DC5 DC4 SW401 SW402 SW403 SW404

IC142	: PST518A	(iG124300)
IC150	: HD6303RP	(iG093500)
IC151	: DSP V1.0	(XA519001)
IC152	: TCS565L-12	(iG148500)
IC128	: YM3804	(iT380400)
IC127	: YM3807	(iT380700)
IC116 ~ 121	: MBM4416-12	(iG12320)
IC131	: TBP28L22N	(XA542001)
IC130, 138	: TC74HC163P	(iR016300)
IC133, 147	: TC74HC273P	(iR027300)
IC149	: HD6350P	(iG132700)
IC129, 137	: TC74HC74P	(iR007400)
IC144	: TC74HC139P	(iR013900)
IC145	: TC74HC373P	(iR037300)
IC146	: TC74HC138P	(iR013800)
IC140	: TC74HC174P	(iR017400)
IC141	: TC74HC245P	(iR024500)
IC139, 143	: TD62003P	(iG127300)
IC148	: TD62506P	(iG138700)
IC154	: TC74HC367P	(iR036700)
IC155	: TC74HC244P	(iR024400)
IC122	: TC74HC04P	(iR000400)
IC153	: TC74HC14P	(iR001400)
IC136	: HD74LS266P	(XA379001)
PC101	**: TLP522**	
Q107, 108	**: 2SC1815 (Y)**	
D119, 120	**: 1SS176**	
XTAL	**: CSA4.00MG**	
F101, 102	**: DSS310-54B222M**	
SW105	**: SSS212**	

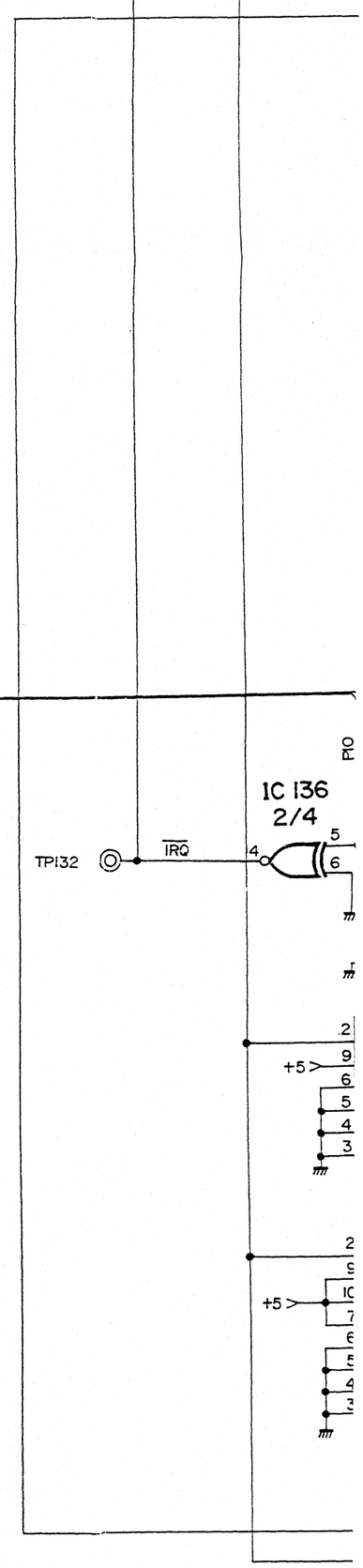

KEC-91142-57 2/2 △3

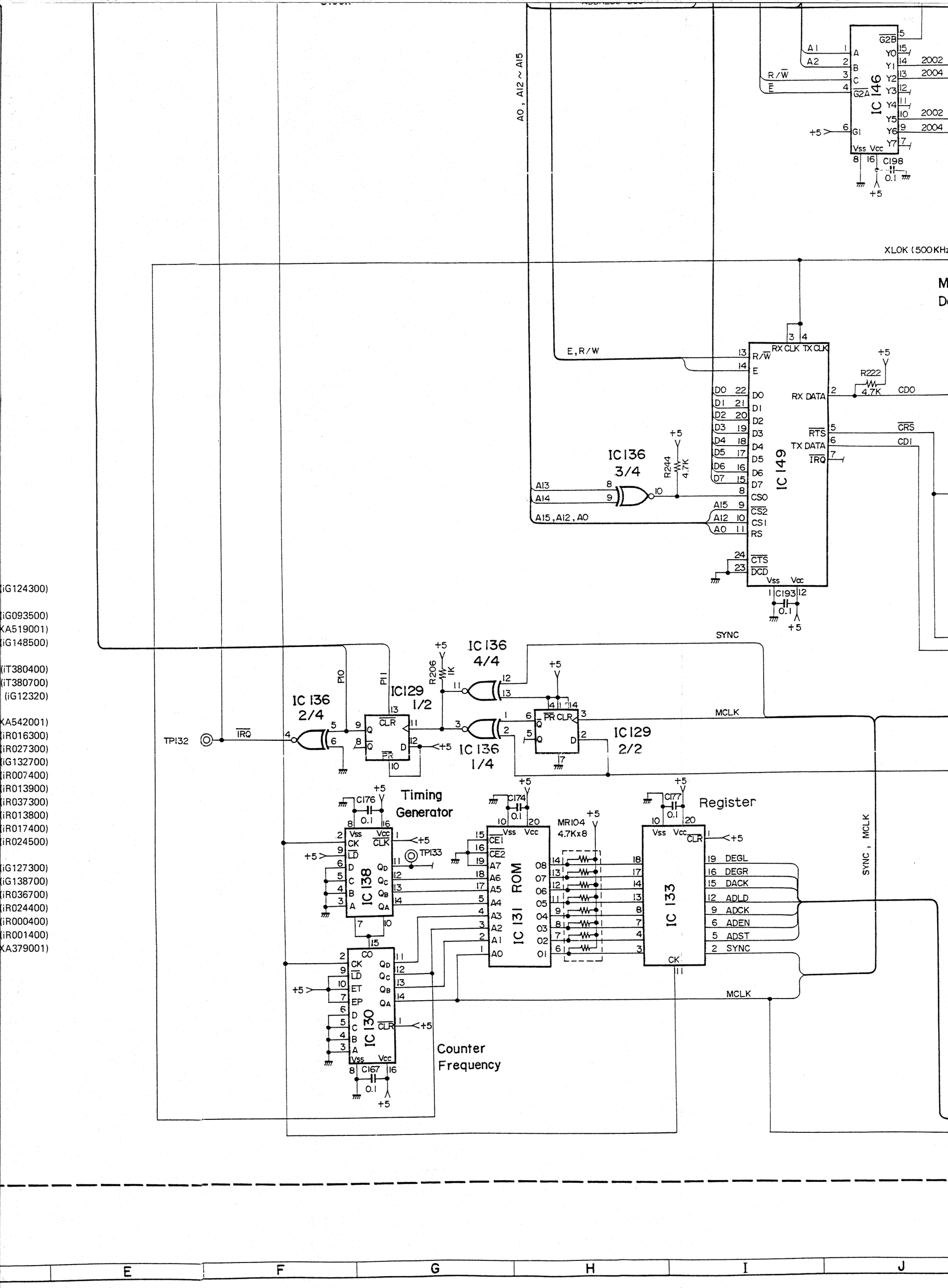

IC 146
IC 149
IC 136 3/4
IC 136 4/4
IC 136 2/4
IC 136 1/4
IC129 1/2
IC129 2/2
IC 138
IC 131 ROM
IC 133
IC 130
Timing Generator
Register
Counter Frequency
XLOK (500KHz
A0, A12 ~ A15
E, R/W
A15, A12, A0
SYNC
MCLK
SYNC, MCLK
TP132
TP133
MR104 4.7Kx8
R222 4.7K
R244 4.7K
R206 1K
C198 0.1
C193 0.1
C176 0.1
C174 0.1
C177 0.1
C167 0.1
DEGL
DEGR
DACK
ADLD
ADCK
ADEN
ADST
SYNC
(iG124300)
(iG093500)
(KA519001)
(iG148500)
(iT380400)
(iT380700)
(iG12320)
(KA542001)
(iR016300)
(iR027300)
(iG132700)
(iR007400)
(iR013900)
(iR037300)
(iR013800)
(iR017400)
(iR024500)
(iG127300)
(iG138700)
(iR036700)
(iR024400)
(iR000400)
(iR001400)
(KA379001)
E
F
G
H
I
J

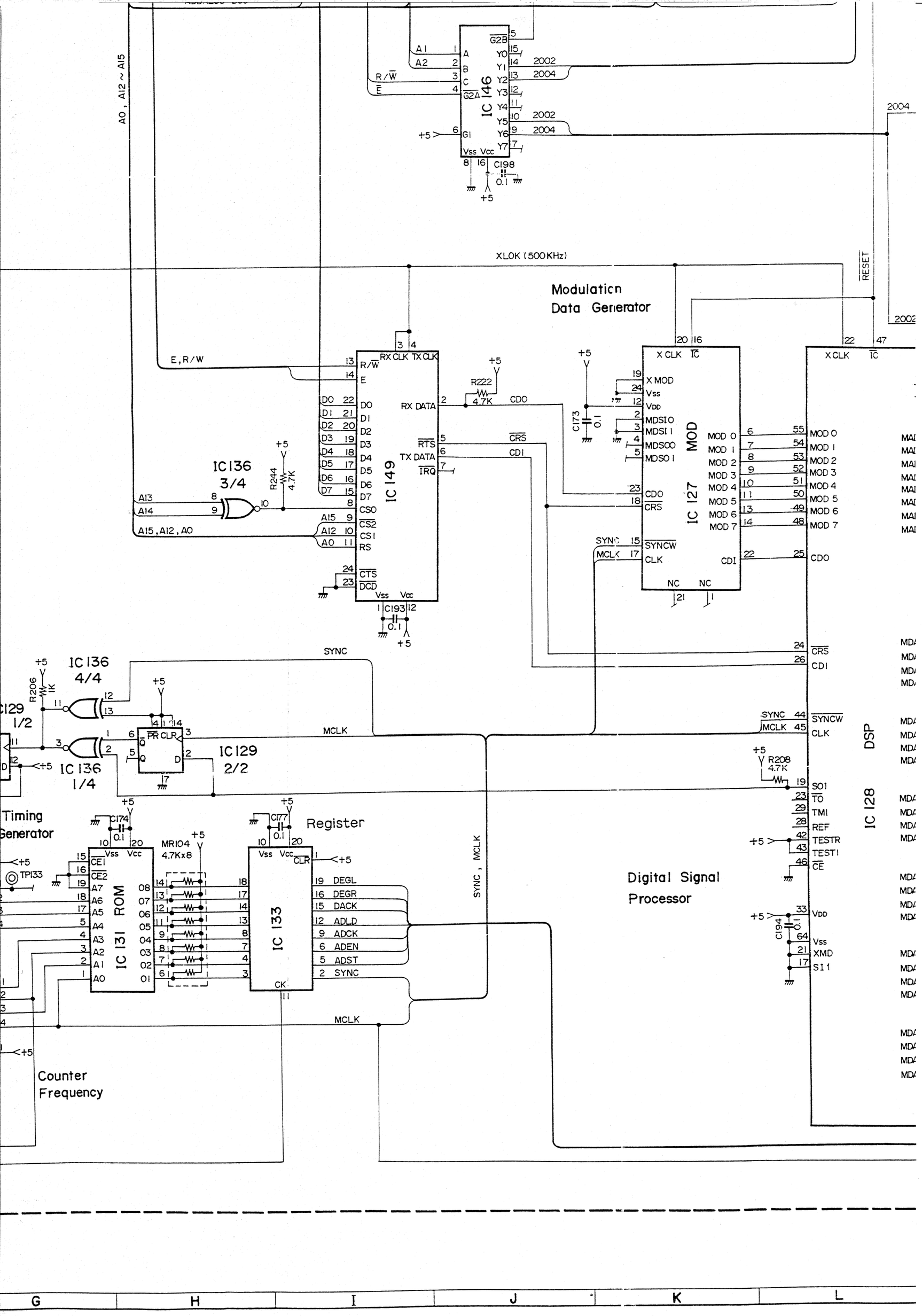

IC 146
IC 149
IC 127 MOD
IC 128 DSP
IC 131 ROM
IC 133
IC 136 3/4
IC 136 4/4
IC 136 1/4
IC 129 1/2
IC 129 2/2
Modulation Data Generator
Timing Generator
Register
Digital Signal Processor
Counter Frequency
XLOK (500KHz)
RESET
SYNC
MCLK
SYNC, MCLK
A0, A12 ~ A15
E, R/W
A15, A12, A0
R222 4.7K
R244 4.7K
R206 1K
R208 4.7K
MR104 4.7Kx8
TP133
G
H
I
J
K
L

11

IC 146
A1
A2
R/W
E
G2B
G2A
G1
Y0
Y1
Y2
Y3
Y4
Y5
Y6
Y7
2002
2004
Vss Vcc
C198
0.1
+5

IC 154
DO
D1
D2
D3
D6
D7
Vcc Vss
OE1 OE2
DB0
DB1
DB2
DB5
DB6
DB7

IC 155
DO
D1
D2
D3
D4
D5
D6
D7
1G 2G
DC0
DC1
DC2
DC3
DC4
DC5
DC6
DC7
C200
MR111
10K x 8

XLOK (500KHz)
RESET

Modulation
Data Generator

IC 149
R/W
E
DO
D1
D2
D3
D4
D5
D6
D7
CS0
CS2
CS1
RS
CTS
DCD
RX CLK
TX CLK
RX DATA
RTS
TX DATA
IRQ
R222
4.7K
CDO
CRS
CDI
C193
0.1

IC 127 MOD
X CLK
X MOD
Vss
VDD
MDSI0
MDSI1
MDSO0
MDSO1
C173
0.1
MOD 0
MOD 1
MOD 2
MOD 3
MOD 4
MOD 5
MOD 6
MOD 7
SYNC
MCLK
SYNCW
CLK
CDI
NC NC

IC 128 DSP
X CLK
OE
WE
CAS
RAS
MADR 0
MADR 1
MADR 2
MADR 3
MADR 4
MADR 5
MADR 6
MADR 7
R209
R210
R211
R212
10K x 4
MR105
10K x 8
MDAT 0
MDAT 1
MDAT 2
MDAT 3
MDAT 4
MDAT 5
MDAT 6
MDAT 7
MDAT 8
MDAT 9
MDAT 10
MDAT 11
MDAT 12
MDAT 13
MDAT 14
MDAT 15
MDAT 16
MDAT 17
MDAT 18
MDAT 29
MDAT 20
MDAT 21
MDAT 22
MDAT 23
MR101
MR102
MR103
SI0
SO0
18 AD OUT
20 DA IN

DRAM
IC 121
IC 120
IC 119
IC 118
IC 117
IC 116
A0 A1 A2 A3 A4 A5 A6 A7 OE WE CAS RAS
C164
C163
C162
C161
C160
C159
0.1

R208
4.7K
SO1
TO
TMI
REF
TESTR
TESTI
CE
C194
0.1
VDD
Vss
XMD
SI1
SYNC 44 SYNCW
MCLK 45 CLK
SYNC , MCLK

Digital Signal
Processor

2002
2004
+5

J K L M N O

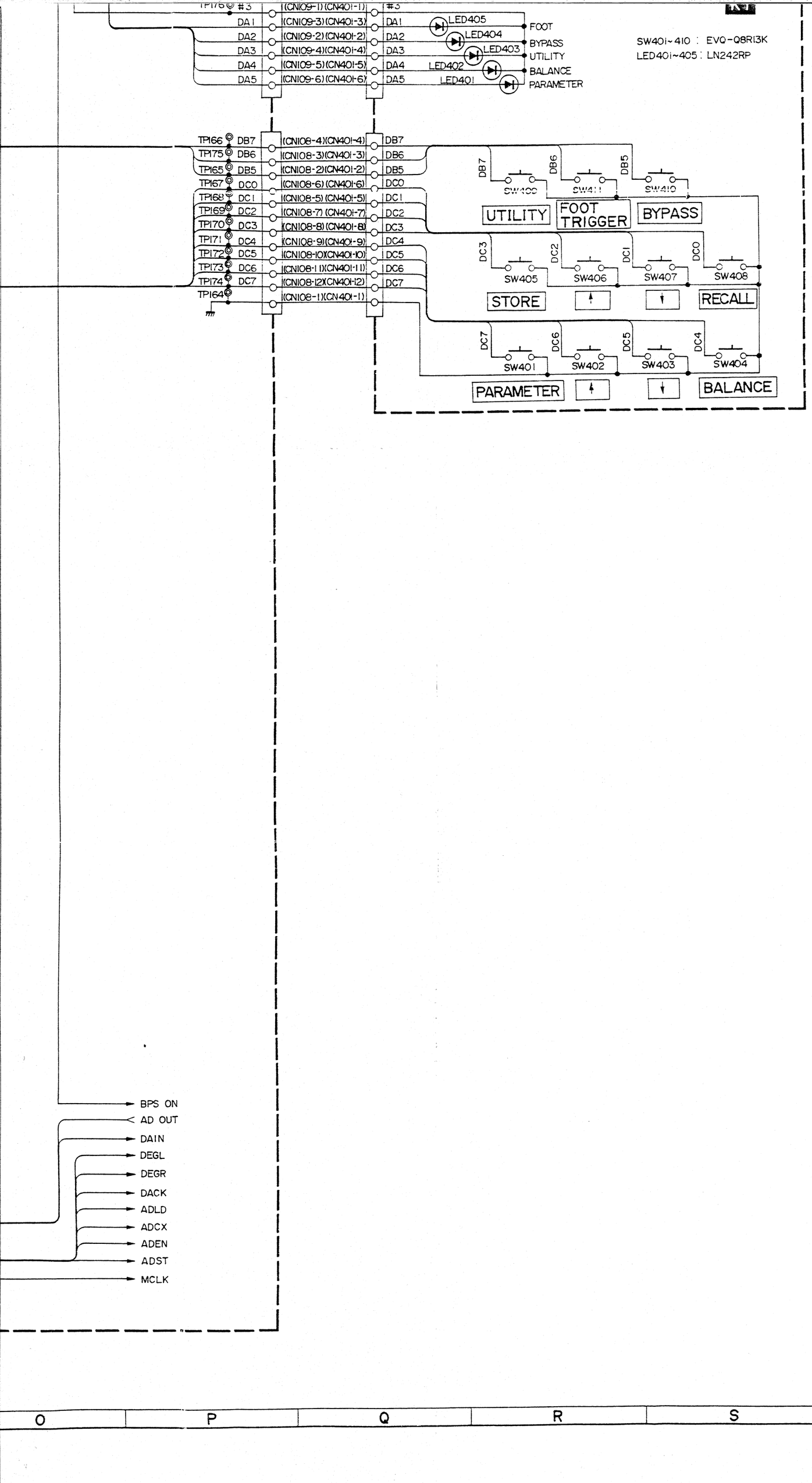

7 8 9 10 11 12 13 14

O P Q R S T

72

	Ref	Part No	Description		部品名	Remarks	ランク
*	1	VA736800	Rear Panel		ﾘｱﾊﾟﾈﾙ	J	
*	1	VA739200	Rear Panel		ﾘｱﾊﾟﾈﾙ	UC	
*	1	VA739300	Rear Panel		ﾘｱﾊﾟﾈﾙ	HDA	
	2	MG001820	Power Cord	7A 3m	電源ｺｰﾄﾞ	J	05
	2	MG000270	Power Cord	10A 3.3m	電源ｺｰﾄﾞ	UC	09
	2	MG000450	Power Cord	6A 3.5m	電源ｺｰﾄﾞ	HD	08
	2	MG001300	Power Cord	7.5A 3.05m	電源ｺｰﾄﾞ	A	07
	3	CB806850	Cord Strain Relief	SR-6N3-4	ｺｰﾄﾞｽﾄｯﾊﾟｰ	UC	02
	3	CB032840	Cord Strain Relief	SR-5N-4	ｺｰﾄﾞｽﾄｯﾊﾟｰ	HDA	01
*	4	VA813800	Power Supply Unit		電源ﾕﾆｯﾄ	J	
*	4	VA813900	Power Supply Unit		電源ﾕﾆｯﾄ	U	
*	4	VA814000	Power Supply Unit		電源ﾕﾆｯﾄ	C	
*	4	VA814100	Power Supply Unit		電源ﾕﾆｯﾄ	HDA	
*	5	VA738100	Rod		ﾛｯﾄﾞ		
	6	CB812380	Push Button		ﾌﾟｯｼｭﾎﾞﾀﾝ		01
*	7	VA738200	Stay		ｽﾃｨ		
*	8	VA849000	AD Circuit Board		ADｼｰﾄ		
*	9	VA757800	Holder,Sheet		ｼｰﾄﾎﾙﾀﾞｰ		
	10	VA849100	KY Circuit Board		KYｼｰﾄ		
	11	VA883800	LCD Assembly		LCD Ass'y		
	12	AA805820	Spacer		ｽﾍﾟｰｻ		
	13	VA061700	Cover, LED		LED ｶﾊﾞｰ		02
*	14	VA302700	Cover, LED		LED ｶﾊﾞｰ		01
*	15	VA849200	FP Circuit Board		FPｼｰﾄ		
*	16	VA738400	Front Panel		ﾌﾛﾝﾄﾊﾟﾈﾙ		
*	17	VA738600	Meter Cover		ﾒｰﾀｰｶﾊﾞｰ		
*	18	VA029600	Switch Escutcheon (L)		ｽｲｯﾁｴｽｶｯｼｮﾝ (L)		
*	19	VA314300	Switch Escutcheon		ｽｲｯﾁｴｽｶｯｼｮﾝ	Single	01
*	20	VA314400	Switch Escutcheon		ｽｲｯﾁｴｽｶｯｼｮﾝ	Double	01
	21	VA029300	Knob		ﾂﾏﾐ		01
*	22	VA909000	Key Top		ｷｰﾄｯﾌﾟ	PARAMETER	
*	22	VA908700	Key Top		ｷｰﾄｯﾌﾟ	↑	
*	22	VA908800	Key Top		ｷｰﾄｯﾌﾟ	↓	
*	22	VA909300	Key Top		ｷｰﾄｯﾌﾟ	BALANCE	
*	22	VA993300	Key Top		ｷｰﾄｯﾌﾟ	STORE	
*	22	VA993400	Key Top		ｷｰﾄｯﾌﾟ	RECALL	
*	22	VA909500	Key Top		ｷｰﾄｯﾌﾟ	UTILITY	
	22	VA993200	Key Top		ｷｰﾄｯﾌﾟ	BYPASS	
	22	VA910900	Key Top		ｷｰﾄｯﾌﾟ	FOOT TRIGGER	
*	23	VA885300	LCD Display		液晶ﾃﾞｨｽﾌﾟﾚｲ		17
*	24	VA902500	LED Diplay		LED ﾃﾞｨｽﾌﾟﾚｲ		06
*	25	VA737800	Bottom Cover		ﾎﾞﾄﾑｶﾊﾞｰ		
*	26	VA908100	Isoration Sheet		絶縁ｼｰﾄ		
	27	CB834210	Foot		ｺﾞﾑ脚		02
*	28	VA737900	Top Cover		ﾄｯﾌﾟｶﾊﾞｰ		
	29	PC900040	Lithium Battery,3V	CR2032	ﾘﾁｭｳﾑ電池		04
	30	LA003690	Lug Terminal		ﾗｸﾞ端子	UCHDA	01
	31	EV413076	Toothed Lock Washer	φ 7 ZMC2-BL	歯付座金	PACK	
	32	EX200180	Hexagonal Nut	7S ZMC2-BL	特殊六角ﾅｯﾄ		
	33	LX200060	Hexagonal Nut	9S FNN3-3g	特殊六角ﾅｯﾄ		01
	34	LX200010	Plain Washer	φ 8 FCM3-BL	特殊平座金		01
	35	EV410096	Toothed Lock Washer	φ 9 ZMC2-Y	歯付座金	PACK	01
	36	EV413036	Toothed Lock Washer	φ 3 FCM3-BL	歯付座金	PACK	01
	37	EA326056	Pan Head Screw	2.6×5 FCM3-BL	ﾅﾍﾞ小ﾈｼﾞ	PACK	01
	38	EI330086	Bind Head Tapping Screw	3×8 FCM3-BL	ﾊﾞｲﾝﾄﾞﾀｯﾋﾟﾝｸﾞﾈｼﾞ	PACK	01
	39	EI340066	Bind Head Tapping Screw	4×6 FCM3-BL	ﾊﾞｲﾝﾄﾞﾀｯﾋﾟﾝｸﾞﾈｼﾞ	PACK	01
*	40	VA880800	Flat Cable	14P	束線		

* : New Parts (新規部品)　NR

ランク : Japan Only